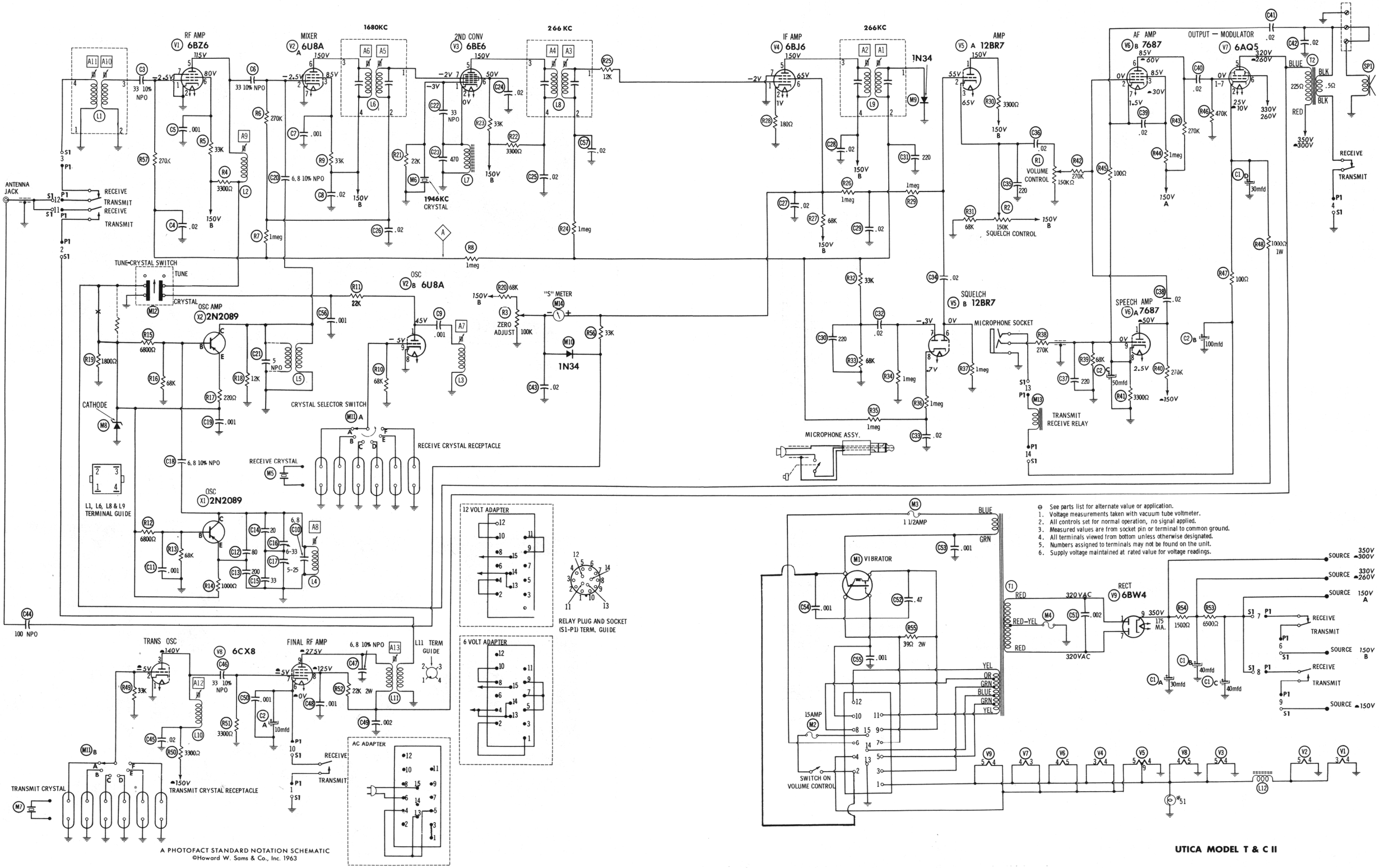

⊖ See parts list for alternate value or application.
1. Voltage measurements taken with vacuum tube voltmeter.
2. All controls set for normal operation, no signal applied.
3. Measured values are from socket pin or terminal to common ground.
4. All terminals viewed from bottom unless otherwise designated.
5. Numbers assigned to terminals may not be found on the unit.
6. Supply voltage maintained at rated value for voltage readings.

A PHOTOFACT STANDARD NOTATION SCHEMATIC
©Howard W. Sams & Co., Inc. 1963

UTICA MODEL T & C II