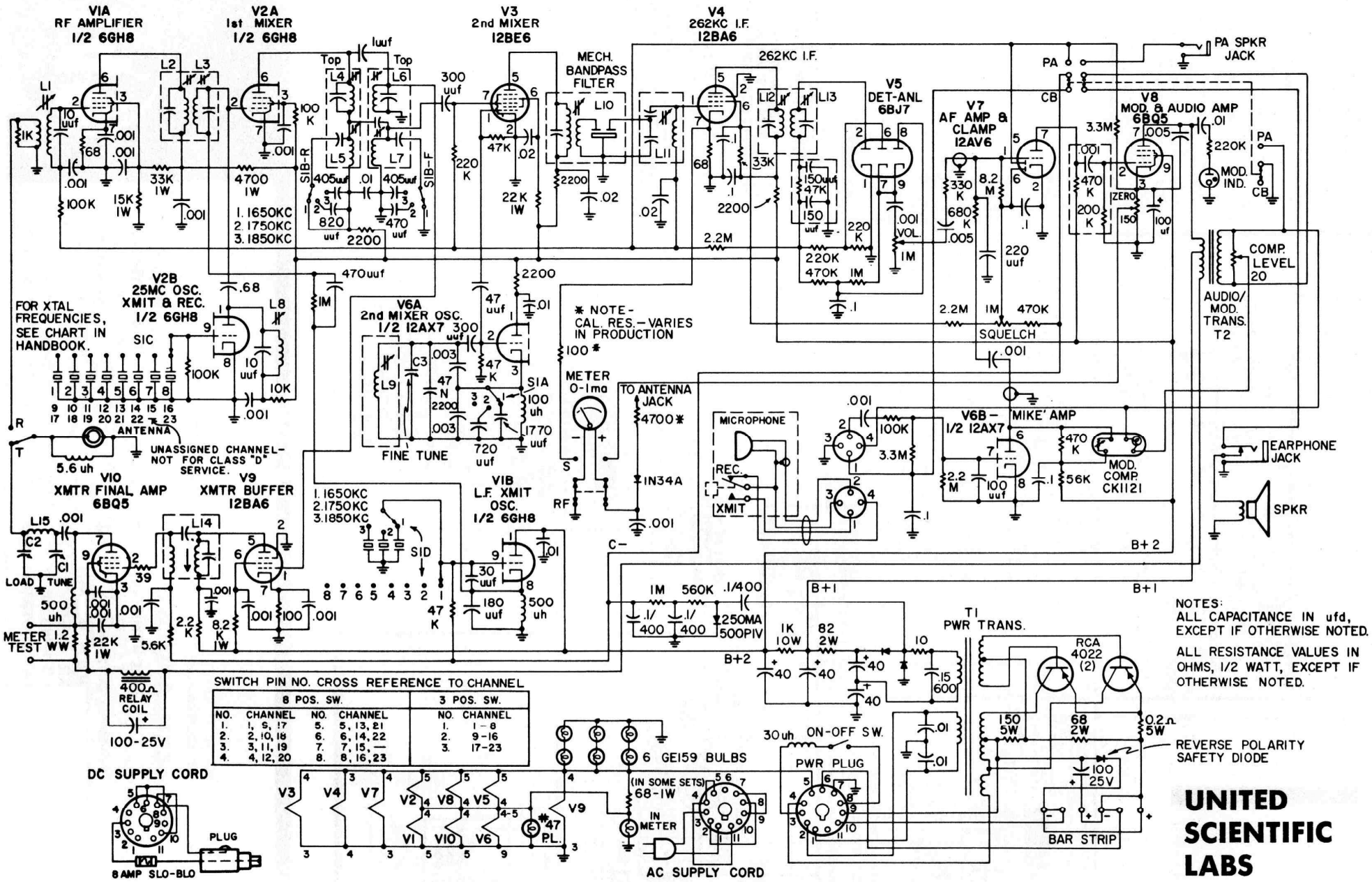

SWITCH PIN NO. CROSS REFERENCE TO CHANNEL

8 POS. SW.				3 POS. SW.	
NO.	CHANNEL	NO.	CHANNEL	NO.	CHANNEL
1.	1, 9, 17	5.	5, 13, 21	1.	1-8
2.	2, 10, 18	6.	6, 14, 22	2.	9-16
3.	3, 11, 19	7.	7, 15, —	3.	17-23
4.	4, 12, 20	8.	8, 16, 23		