SCHEMATIC DIAGRAM

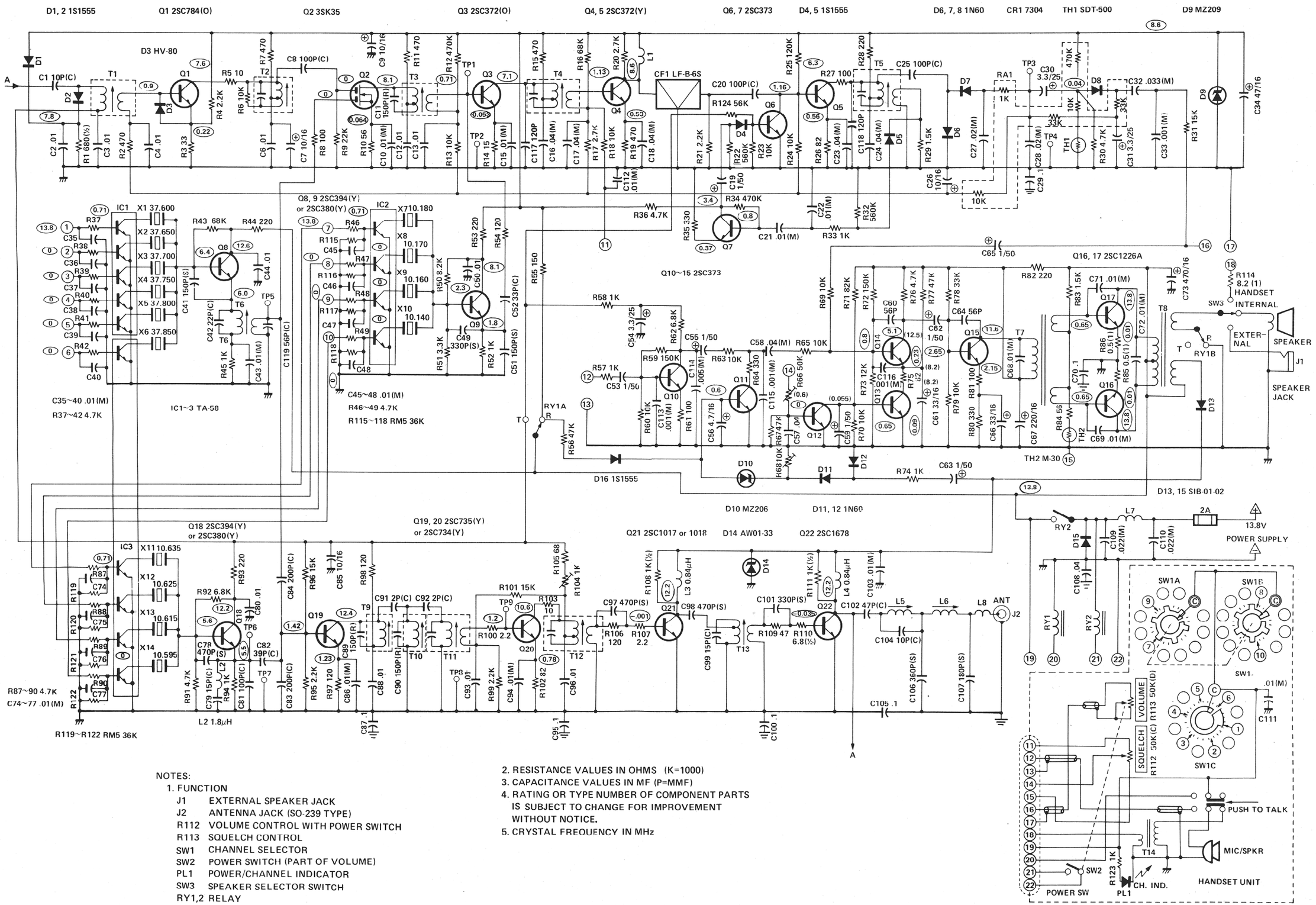

NOTES:

1. FUNCTION
   - J1 EXTERNAL SPEAKER JACK
   - J2 ANTENNA JACK (SO-239 TYPE)
   - R112 VOLUME CONTROL WITH POWER SWITCH
   - R113 SQUELCH CONTROL
   - SW1 CHANNEL SELECTOR
   - SW2 POWER SWITCH (PART OF VOLUME)
   - PL1 POWER/CHANNEL INDICATOR
   - SW3 SPEAKER SELECTOR SWITCH
   - RY1,2 RELAY
2. RESISTANCE VALUES IN OHMS (K=1000)
3. CAPACITANCE VALUES IN MF (P=MMF)
4. RATING OR TYPE NUMBER OF COMPONENT PARTS IS SUBJECT TO CHANGE FOR IMPROVEMENT WITHOUT NOTICE.
5. CRYSTAL FREQUENCY IN MHz