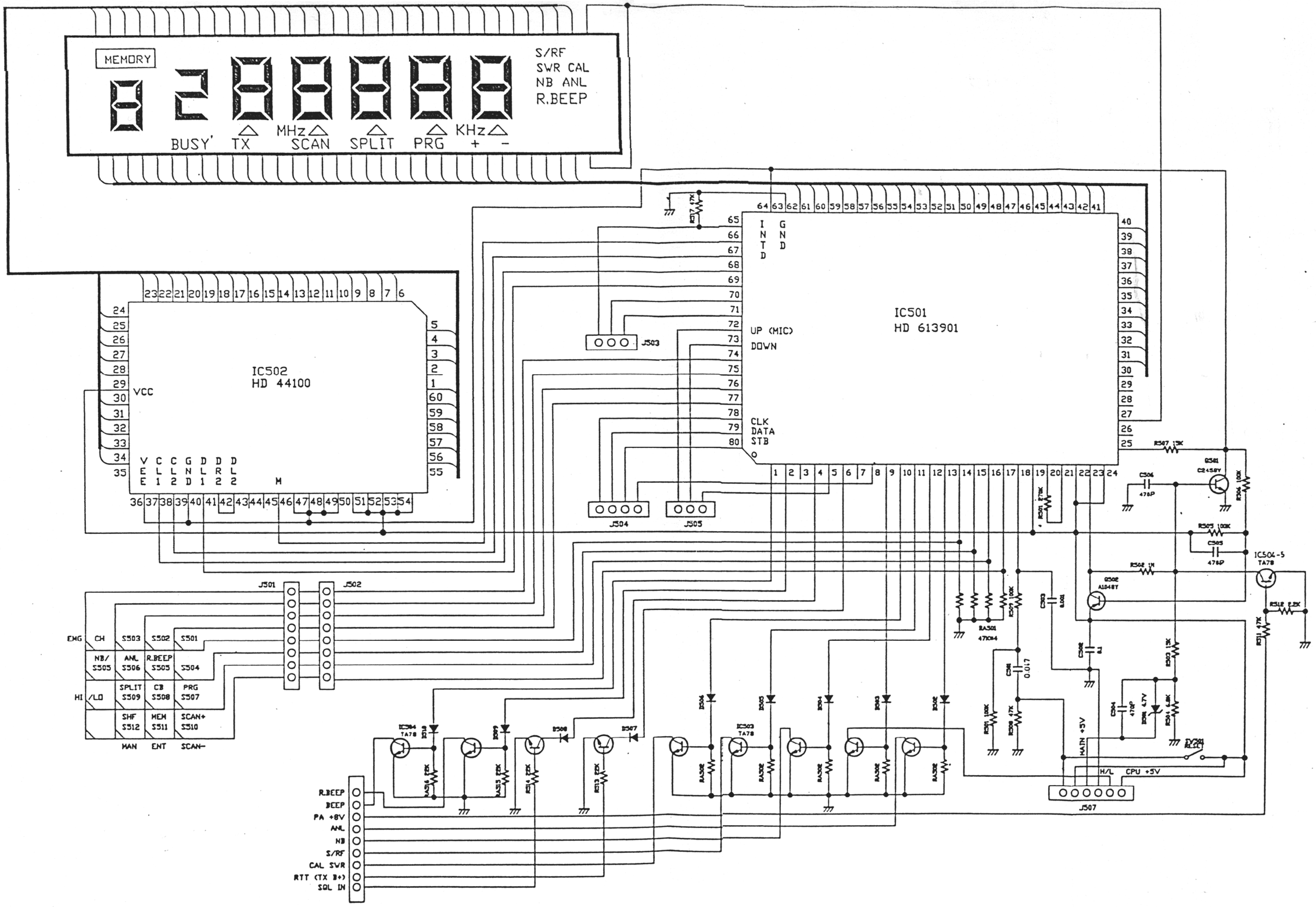
MEMORY
S/RF
SWR CAL
NB ANL
R.BEEP
BUSY
TX
MHz
SCAN
SPLIT
PRG
KHz
+
-
IC501
HD 613901
IC502
HD 44100
VCC
INTD
GND
UP (MIC)
DOWN
CLK
DATA
STB
J503
J504
J505
J501
J502
J507
EMG
CH
S503
S502
S501
NB/
S505
ANL
S506
R.BEEP
S505
S504
HI
/LO
SPLIT
S509
CB
S508
PRG
S507
SHF
S512
MEM
S511
SCAN+
S510
MAN
ENT
SCAN-
R.BEEP
BEEP
PA +8V
ANL
NB
S/RF
CAL SWR
RTT (TX B+)
SQL IN
MAIN +5V
H/L
CPU +5V
IC504-5
TA78
IC503
TA78
IC504
TA78
Q501
C2458Y
Q502
A1048T
RA501
47K84
R507 15K
R506 100K
R505 100K
R509 100K
R508 47K
R501 100K
R503 15K
R504 6.8K
R502 1K
R512 2.2K
R511 47K
R501 27K
C506
470P
C505
470P
C504
470P
C502
0.1
C503
0.001
C501
0.017
D508 4.7V
D501
RL-1
D502
D503
D504
D505
D506
D507
D509
D510
R516 22K
R515 22K
R514 22K
R513 22K
RA502