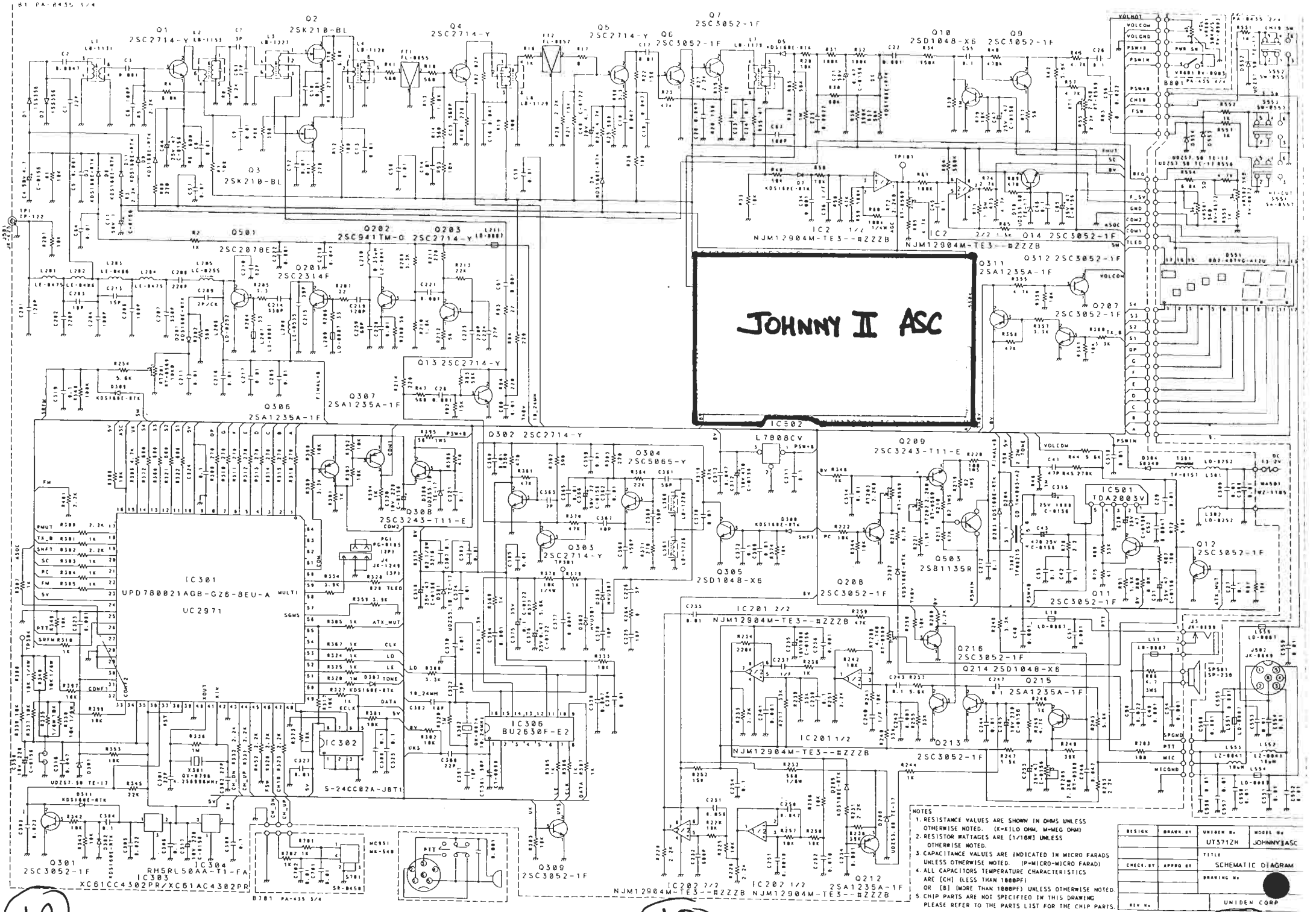
JOHNNY II ASC
IC301
UPD780021AGB-GZ8-BEU-A
UC2971
IC302
S-24CC02A-J8T1
IC306
BU2630F-E2
IC501
TDA2003V
IC304
RH5RL50AA-T1-FA
IC303
XC61CC4302PR/XC61AC4302PR
IC2
NJM12904M-TE3--#ZZZB
IC201 2/2
IC201 1/2
IC202 2/2
IC202 1/2
Q1
2SC2714-Y
Q2
2SK210-BL
Q3
2SK210-BL
Q4
2SC2714-Y
Q5
2SC2714-Y
Q6
2SC3052-1F
Q7
2SC3052-1F
Q9
2SC3052-1F
Q10
2SD1048-X6
Q11
2SC3052-1F
Q12
2SC3052-1F
Q13
2SC2714-Y
Q14
2SC3052-1F
Q201
2SC2314F
Q202
2SC941TM-O
Q203
2SC2714-Y
Q207
2SC3052-1F
Q209
2SC3243-T11-E
Q212
2SA1235A-1F
Q213
2SC3052-1F
Q214
2SD1048-X6
Q215
2SA1235A-1F
Q216
2SC3052-1F
Q301
2SC3052-1F
Q302
2SC2714-Y
Q303
2SC2714-Y
Q304
2SC5065-Y
Q305
2SD104B-X6
Q306
2SA1235A-1F
Q307
2SA1235A-1F
Q308
2SC3243-T11-E
Q309
2SC3052-1F
Q311
2SA1235A-1F
Q312
2SC3052-1F
Q501
2SC2078E
Q503
2SB1135R
Q20B
2SC3052-1F
L7808CV
B801
PA-435 1/4
B801
PA-435 3/4
B801
PA-435 2/4
PTT
MIC
MICGND
SPGND
SPS01
SP-230
WA501
WZ-1185
J3
JK-8199
J587
JK-8449
DC 13.2V
NOTES
1. RESISTANCE VALUES ARE SHOWN IN OHMS UNLESS OTHERWISE NOTED. (K=KILO OHM, M=MEG OHM)
2. RESISTOR WATTAGES ARE [1/16W] UNLESS OTHERWISE NOTED.
3. CAPACITANCE VALUES ARE INDICATED IN MICRO FARADS UNLESS OTHERWISE NOTED. (P=MICRO-MICRO FARAD)
4. ALL CAPACITORS TEMPERATURE CHARACTERISTICS ARE [CH] (LESS THAN 1000PF) OR [B] (MORE THAN 1000PF) UNLESS OTHERWISE NOTED.
5. CHIP PARTS ARE NOT SPECIFIED IN THIS DRAWING PLEASE REFER TO THE PARTS LIST FOR THE CHIP PARTS.
DESIGN
DRAWN BY
UNIDEN No.
UT571ZH
MODEL No.
JOHNNY II ASC
TITLE
SCHEMATIC DIAGRAM
CHECK BY
APPRO BY
DRAWING No.
REV No.
UNIDEN CORP
1A
1B
1C

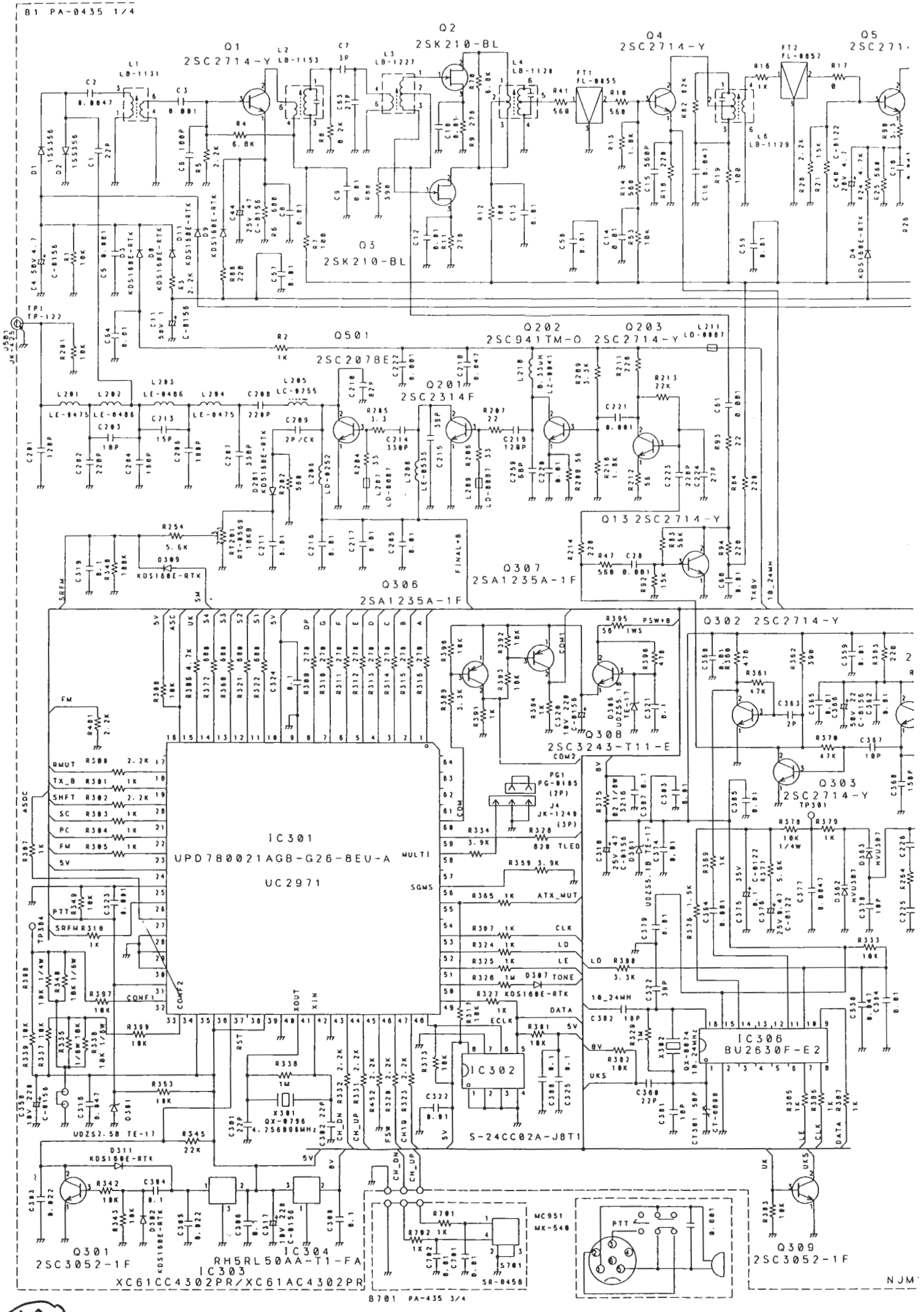
B1 PA-0435 1/4
Q1 2SC2714-Y
Q2 2SK210-BL
Q3 2SK210-BL
Q4 2SC2714-Y
Q5 2SC271
Q501 2SC2078E
Q202 2SC941TM-O
Q203 2SC2714-Y
Q201 2SC2314F
Q13 2SC2714-Y
Q306 2SA1235A-1F
Q307 2SA1235A-1F
Q302 2SC2714-Y
Q308 2SC3243-T11-E
Q303 2SC2714-Y
IC301 UPD780021AGB-G26-8EU-A
UC2971
IC302 S-24CC02A-J8T1
IC306 BU2630F-E2
IC304 RH5RL50AA-T1-FA
IC303 XC61CC4302PR/XC61AC4302PR
Q301 2SC3052-1F
Q309 2SC3052-1F
8701 PA-435 3/4
1A

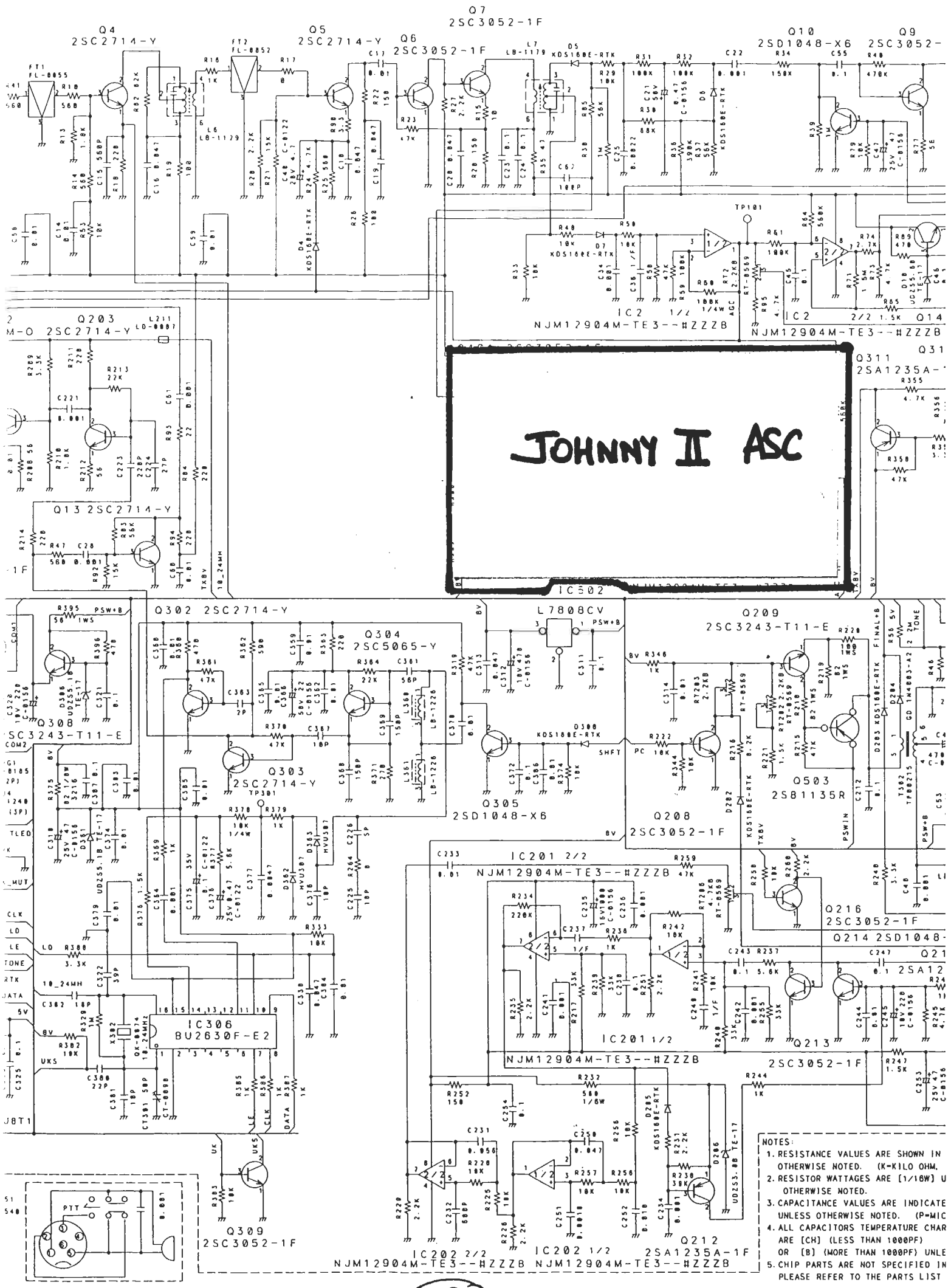
JOHNNY II ASC
Q7 2SC3052-1F
Q4 2SC2714-Y
Q5 2SC2714-Y
Q6 2SC3052-1F
Q10 2SD1048-X6
Q9 2SC3052-
Q203 2SC2714-Y
Q13 2SC2714-Y
Q311 2SA1235A-
IC2 1/2 NJM12904M-TE3--#ZZZB
IC2 2/2 NJM12904M-TE3--#ZZZB
IC302
Q302 2SC2714-Y
Q304 2SC5065-Y
Q303 2SC2714-Y
Q308
Q305 2SD1048-X6
L7808CV
Q209 2SC3243-T11-E
Q503 2SB1135R
Q208 2SC3052-1F
Q216 2SC3052-1F
Q214 2SD1048-
Q213 2SC3052-1F
IC201 2/2 NJM12904M-TE3--#ZZZB
IC201 1/2 NJM12904M-TE3--#ZZZB
IC306 BU2630F-E2
Q309 2SC3052-1F
Q212 2SA1235A-1F
IC202 2/2 NJM12904M-TE3--#ZZZB
IC202 1/2 NJM12904M-TE3--#ZZZB
NOTES:
1. RESISTANCE VALUES ARE SHOWN IN
OTHERWISE NOTED. (K=KILO OHM,
2. RESISTOR WATTAGES ARE (1/16W) U
OTHERWISE NOTED.
3. CAPACITANCE VALUES ARE INDICATE
UNLESS OTHERWISE NOTED. (P=MIC
4. ALL CAPACITORS TEMPERATURE CHAR
ARE (CH) (LESS THAN 1000PF)
OR (B) (MORE THAN 1000PF) UNLE
5. CHIP PARTS ARE NOT SPECIFIED IN
PLEASE REFER TO THE PARTS LIST

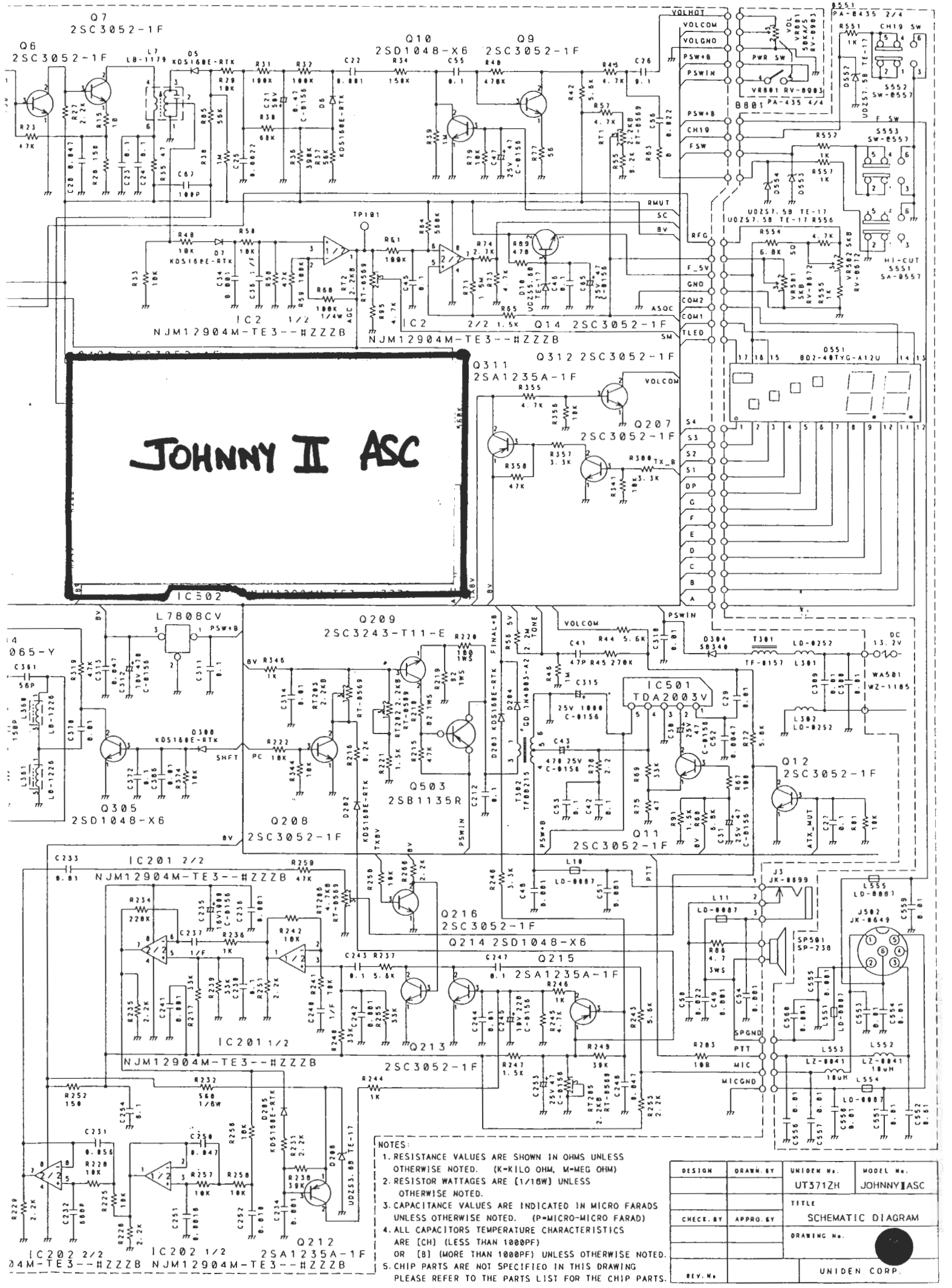
JOHNNY II ASC
Q7 2SC3052-1F
Q6 2SC3052-1F
Q10 2SD1048-X6
Q9 2SC3052-1F
IC2 1/2 NJM12904M-TE3--#ZZZB
IC2 2/2 NJM12904M-TE3--#ZZZB
Q14 2SC3052-1F
Q312 2SC3052-1F
Q311 2SA1235A-1F
Q207 2SC3052-1F
IC502
Q209 2SC3243-T11-E
Q305 2SD1048-X6
Q208 2SC3052-1F
Q503 2SB1135R
IC501 TDA2003V
Q11 2SC3052-1F
Q12 2SC3052-1F
IC201 2/2 NJM12904M-TE3--#ZZZB
Q216 2SC3052-1F
Q214 2SD1048-X6
Q215 2SA1235A-1F
Q213 2SC3052-1F
IC201 1/2 NJM12904M-TE3--#ZZZB
IC202 2/2
IC202 1/2 NJM12904M-TE3--#ZZZB
Q212 2SA1235A-1F
VOLHOT
VOLCOM
VOLGND
PSW+B
PSWIN
CH19
FSW
RMUT
SC
BV
RFG
F_5V
GND
COM2
COM1
TLED
ASQC
SM
S4
S3
S2
S1
DP
G
F
E
D
C
B
A
PTT
MIC
MICGND
SPGND
PWR SW
VR801 RV-0803
B801 PA-435 4/4
B551 PA-0435 2/4
S552 SW-0557
S553 SW-0557
HI-CUT S551 SA-0557
D551 BD2-40TYG-A12U
WA501 WZ-1185
J3 JK-0899
J502 JK-0649
SP501 SP-238
DC 13.2V
L7808CV
NOTES:
1. RESISTANCE VALUES ARE SHOWN IN OHMS UNLESS OTHERWISE NOTED. (K=KILO OHM, M=MEG OHM)
2. RESISTOR WATTAGES ARE (1/16W) UNLESS OTHERWISE NOTED.
3. CAPACITANCE VALUES ARE INDICATED IN MICRO FARADS UNLESS OTHERWISE NOTED. (P=MICRO-MICRO FARAD)
4. ALL CAPACITORS TEMPERATURE CHARACTERISTICS ARE [CH] (LESS THAN 1000PF) OR [B] (MORE THAN 1000PF) UNLESS OTHERWISE NOTED.
5. CHIP PARTS ARE NOT SPECIFIED IN THIS DRAWING PLEASE REFER TO THE PARTS LIST FOR THE CHIP PARTS.
DESIGN
DRAWN. BY
UNIDEN No. UT371ZH
MODEL No. JOHNNY II ASC
TITLE SCHEMATIC DIAGRAM
CHECK. BY
APPRO. BY
DRAWING No.
REV. No
UNIDEN CORP.

1C

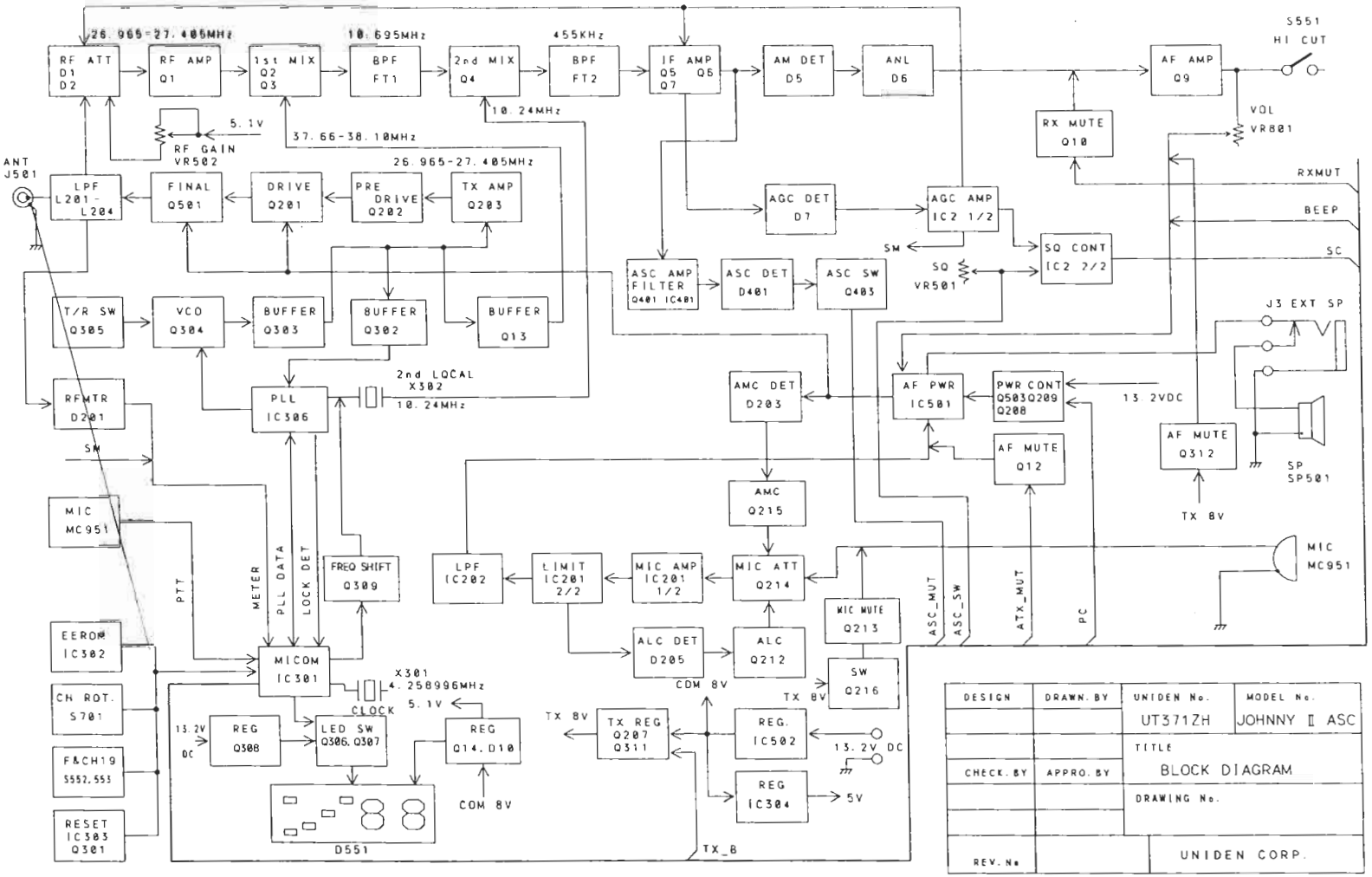

DESIGN	DRAWN. BY	UNIDEN No.	MODEL No.
		UT371ZH	JOHNNY II ASC
		TITLE	
CHECK. BY	APPRO. BY	BLOCK DIAGRAM	
		DRAWING No.	
REV. No		UNIDEN CORP.	

2A

2B

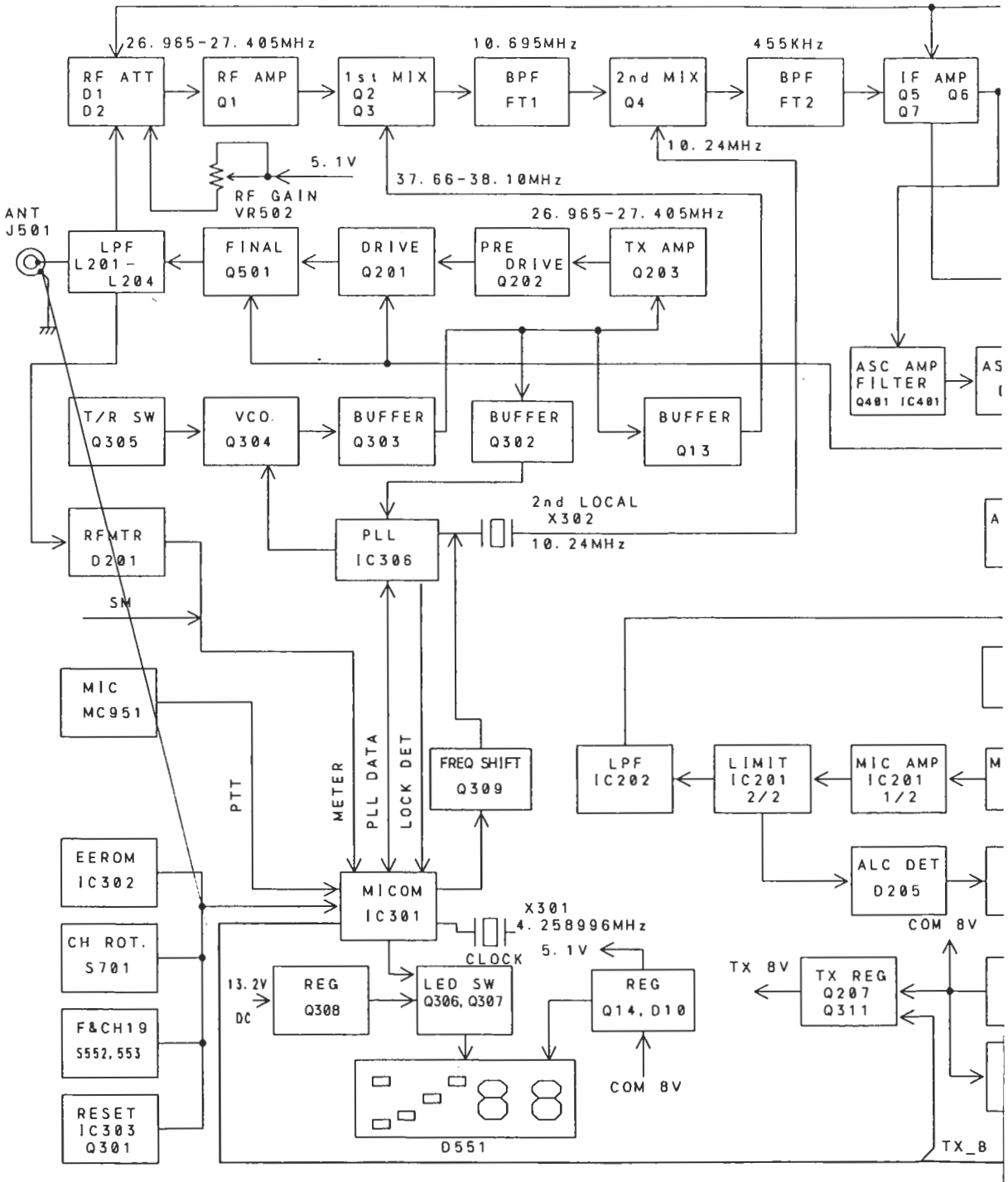
26.965-27.405MHz
10.695MHz
455KHz
RF ATT D1 D2
RF AMP Q1
1st MIX Q2 Q3
BPF FT1
2nd MIX Q4
BPF FT2
IF AMP Q5 Q6 Q7
10.24MHz
5.1V
37.66-38.10MHz
RF GAIN VR502
ANT J501
26.965-27.405MHz
LPF L201-L204
FINAL Q501
DRIVE Q201
PRE DRIVE Q202
TX AMP Q203
ASC AMP FILTER Q401 IC401
T/R SW Q305
VCO. Q304
BUFFER Q303
BUFFER Q302
BUFFER Q13
2nd LOCAL X302
10.24MHz
RFMTR D201
PLL IC306
SW
MIC MC951
PTT
METER
PLL DATA
LOCK DET
FREQ SHIFT Q309
LPF IC202
LIMIT IC201 2/2
MIC AMP IC201 1/2
EEROM IC302
MICOM IC301
ALC DET D205
COM 8V
X301 4.258996MHz
CLOCK
5.1V
CH ROT. S701
13.2V DC
REG Q308
LED SW Q306, Q307
REG Q14, D10
TX 8V
TX REG Q207 Q311
F&CH19 S552, S53
COM 8V
RESET IC303 Q301
D551
TX_B

2A

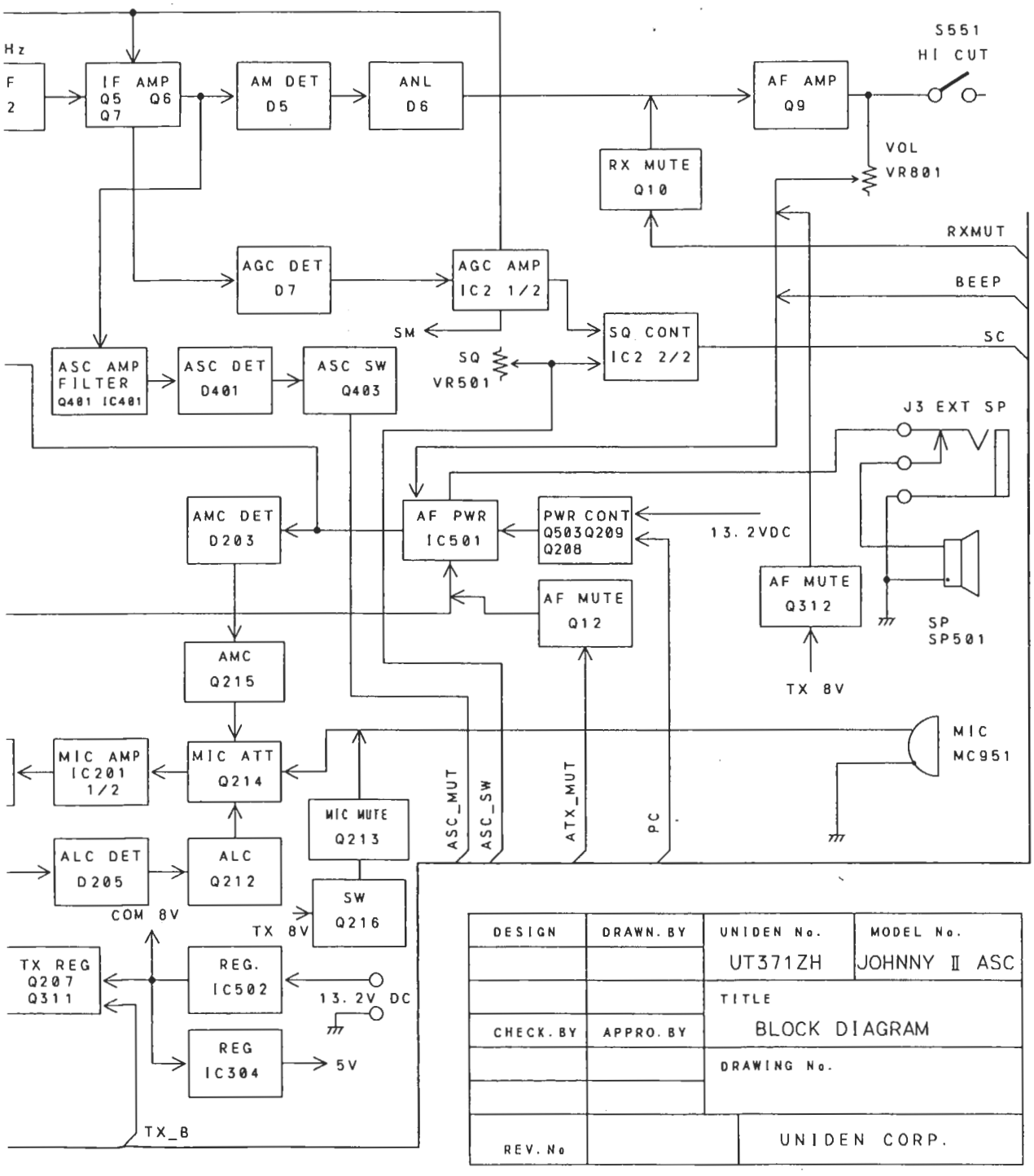

DESIGN	DRAWN. BY	UNIDEN No.	MODEL No.
		UT371ZH	JOHNNY II ASC
		TITLE	
CHECK. BY	APPRO. BY	BLOCK DIAGRAM	
		DRAWING No.	
REV. No		UNIDEN CORP.	

2B

B001: PA-435AA 1/4 (TOP VIEW)

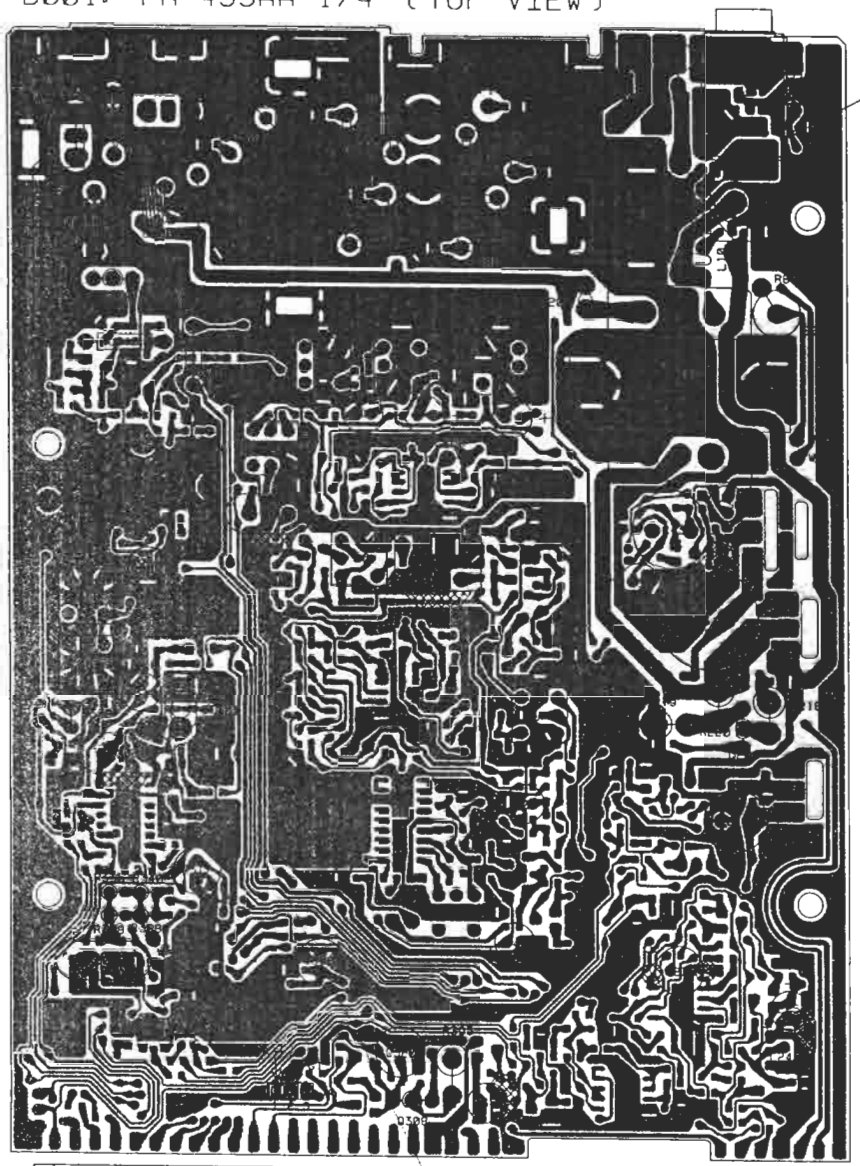

PUT JAPANESE TAPE UNDER J3

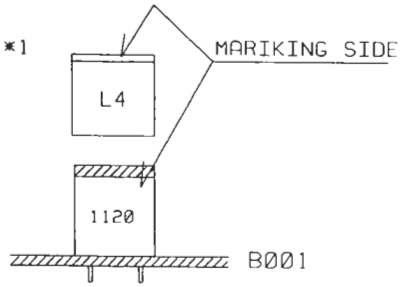

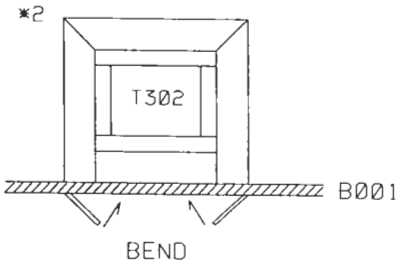

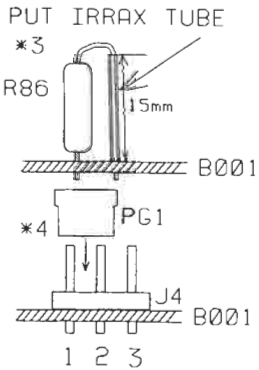

REVISIONS																				
	REV. CODE	△	△	△	△	△	△	△	△	△	△	△	△	△	△	△	△	△	△	△
	DATE																			
	LOT#/RN#																			
	REVISED BY																			
	CHECKED BY																			

3A

: YELLOW BOND LOCK(SC-121)

3B

C004	4.7UF 50V	C-0156
C011	1UF 50V	C-0156
C021	0.47UF 50V	C-0156
C030	47UF 25V	C-0156
C031	47UF 25V	C-0156
C043	470UF 25V	C-0156
C044	47UF 25V	C-0156
C047	47UF 25V	C-0156
C065	47UF 25V	C-0156
C235	1000UF 18V	C-0156
C245	220UF 10V	C-0156
C253	47UF 25V	C-0156
C310	47UF 25V	C-0156
C312	470UF 10V	C-0156
C315	1000UF 25V	C-0156
C317	220UF 10V	C-0156
C320	220UF 10V	C-0156
C550	220UF 10V	C-0156
C566	22UF 50V	C-0156
CT301	CT-090 ECA-LA050M52 50PF	
D204	GD 1N4003-A2	
D304	SB340	
FT001	FL-055 10M07AZ	
FT002	FL-052 LTS455HTW	
J003	JK-899 JH3501-0200	
J004	JK-1249 IMSA-9210B-1-0520	
L001	LB-1131 KS2484F	
L002	LB-1153 KS2485NC	
L003	LB-1227 KS2553N	
L004	LB-1120 KS2482AC	
L006	LB-1129 7PL4A151N	
L007	LB-1179 7MK4A035N	
L010	LD-087 BF04-3*5*1	
L011	LD-087 BF04-3*5*1	
L201	LE-475 AC1979	
L202	LE-486 AC1973	
L203	LE-486 AC1973	
L204	LE-475 AC1979	
L205	LC-255 MD146-08F42	
L206	LD-252 3A1737AM	
L207	LD-087 BF04-3*5*1	
L208	LE-535	
L209	LD-087 BF04-3*5*1	
L210	LZ-041 0.33UH	
L211	LD-087 BF04-3*5*1	
L301	LD-252 3A1737AM	
L302	LD-252 3A1737AM	
L360	LB-1226 KY1107R	
L361	LB-1226 KY1107R	
PG001	PG-185 IMSA-9213H-1	
Q201	DB-792 2SC2514F	
Q202	DB-301 2SC9417M-D	
Q209	DB-867 2SC3243-T11-E	
Q308	DB-867 2SC3243-T11-E	
R060	100K 1/4W	
R086	4.7 3WS	
R218	82 1WS	
R219	82 1WS	
R220	100 1WS	
R335	10K 1/8W	
R338	10K 1/8W	
R340	10K 1/8W	

R378	10K 1/4W	
R395	56 1WS	
R398	10K 1/4W	
T301	TF-157	
T302	TF-215	
TP001	TP-122 1820-01-PP1	
W001	UL1007 #24 10-140-3 GRY	
W002	UL1007 #24 10-140-3 WHT	
W003	UL1571 #26 3-30-3 WHT	
X301	QX-798 4.258998MHz	
X302	QX-074 10.240MHz	

NOTES:

1. RESISTANCE VALUES ARE SHOWN IN OHMS UNLESS OTHERWISE NOTED. (K-KILO OHM. M-MEG OHM)
2. CAPACITANCE VALUES ARE INDICATED IN MICRO FARADS UNLESS OTHERWISE NOTED.

DESIGN. BY	DRAWN. BY	UNIDEN NO.	MODEL NO.
		UT371ZH	JOHNNY II ASC
		TITLE MAIN PCB PARTS ASS'Y TOP VIEW	
CHECK. BY	APPRO. BY	DRAWING NO.	
REV. NO.		UNIDEN CORP.	

3C

B001: PA-435AA 1/4 (TOP VIEW)

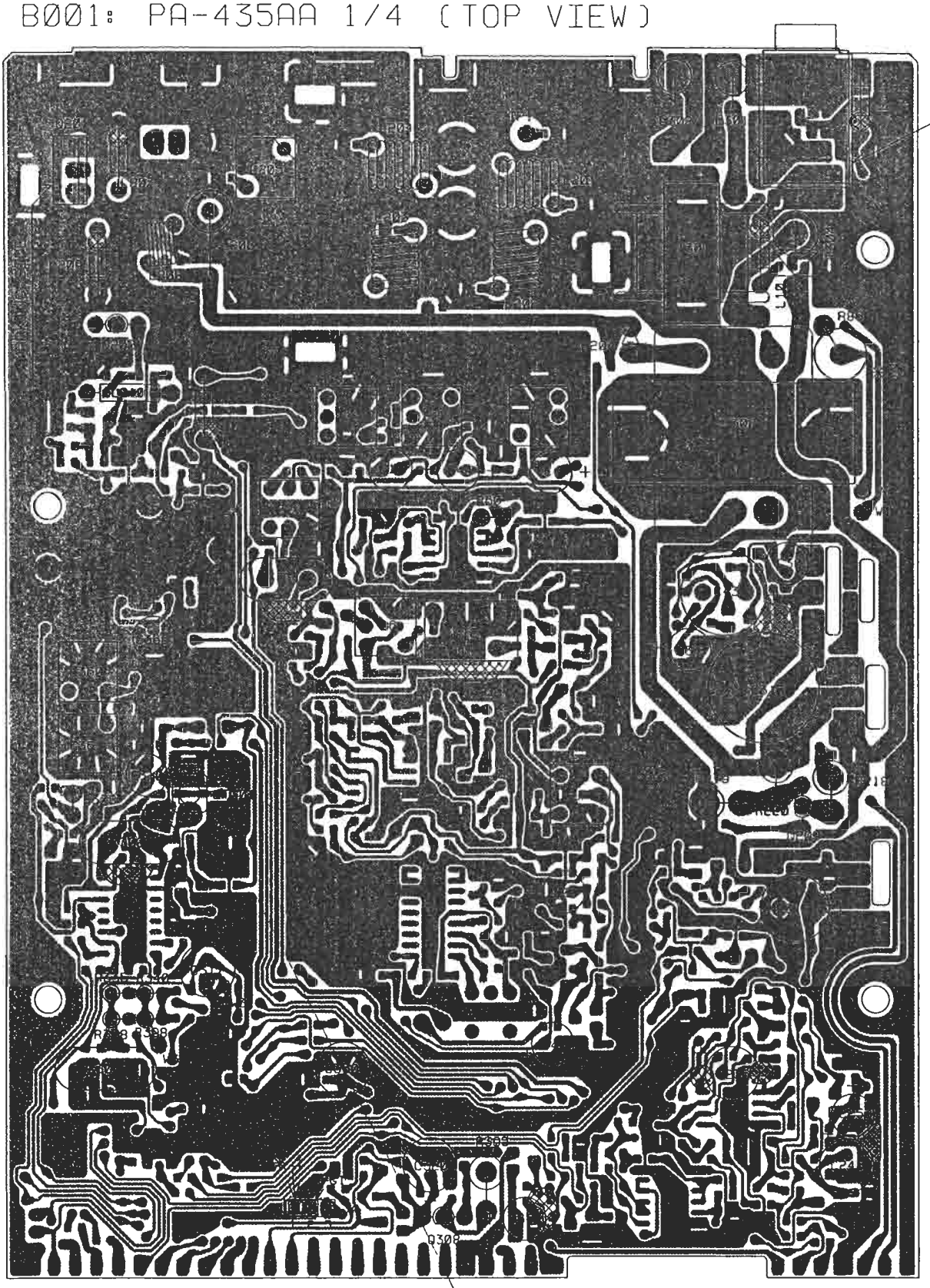

PUT JAP
UNDER

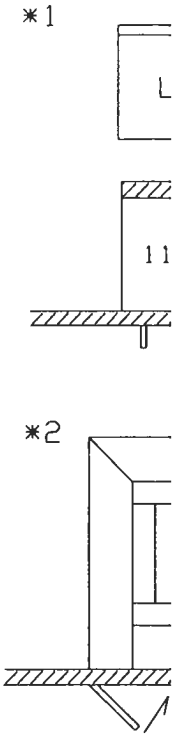

PUT
*3
R86

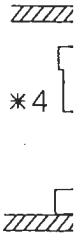

REVISIONS																				
	REV. CODE	△	△	△	△	△	△	△	△	△	△	△	△	△	△	△	△	△	△	△
	DATE																			
	LOT#/RN#																			
	REVISED BY																			
	CHECKED BY																			

: YELLOW

3A

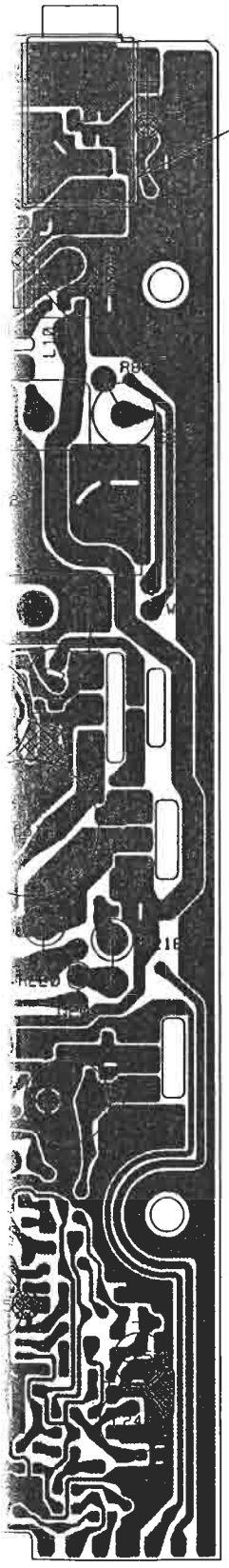

PUT JAPANESE TAPE
UNDER J3

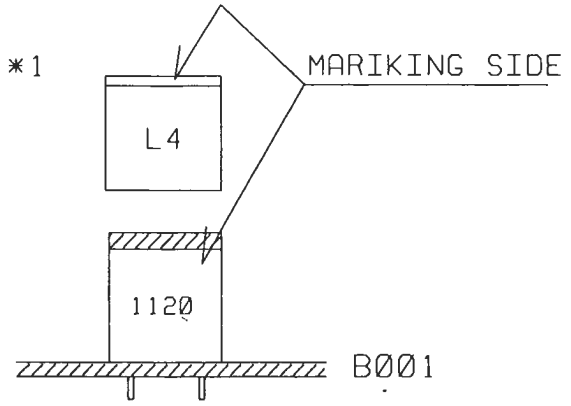

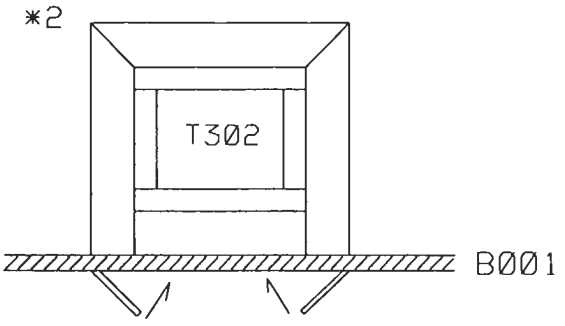

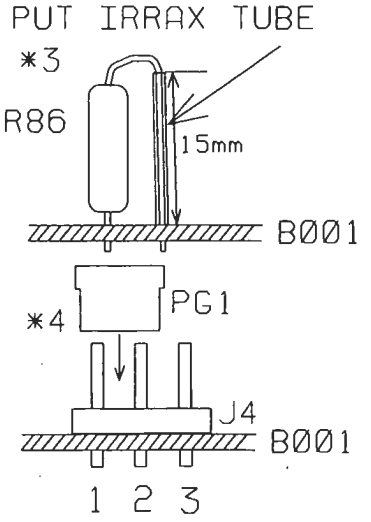

: YELLOW BOND LOCK(SC-121)

3B

C004	4.7UF 50V	C-0156
C011	1UF 50V	C-0156
C021	0.47UF 50V	C-0156
C030	47UF 25V	C-0156
C031	47UF 25V	C-0156
C043	470UF 25V	C-0156
C044	47UF 25V	C-0156
C047	47UF 25V	C-0156
C065	47UF 25V	C-0156
C235	1000UF 16V	C-0156
C245	220UF 10V	C-0156
C253	47UF 25V	C-0156
C310	47UF 25V	C-0156
C312	470UF 10V	C-0156
C315	1000UF 25V	C-0156
C317	220UF 10V	C-0156
C320	220UF 10V	C-0156
C350	220UF 10V	C-0156
C366	22UF 50V	C-0156
CT301	CT-090 ECA-LA050M52 50PF	
D204	GD 1N4003-A2	
D304	SB340	
FT001	FL-055 10M07AZ	
FT002	FL-852 LTS455HTW	
J003	JK-899 JH3501-020D	
J004	JK-1249 IMSA-9210B-1-03Z0	
L001	LB-1131 KS2484F	
L002	LB-1153 KS2485NC	
L003	LB-1227 KS2553N	
L004	LB-1120 KS2482AC	
L006	LB-1129 7PL4A151N	
L007	LB-1179 7MK4A033N	
L010	LD-087 8F04-3*5*1	
L011	LD-087 8F04-3*5*1	
L201	LE-475 AC1979	
L202	LE-486 AC1973	
L203	LE-486 AC1973	
L204	LE-475 AC1979	
L205	LC-255 MD146-08F42	
L206	LD-252 3A1737AH	
L207	LD-087 8F04-3*5*1	
L208	LE-535	
L209	LD-087 8F04-3*5*1	
L210	LZ-041 0.33UH	
L211	LD-087 8F04-3*5*1	
L301	LD-252 3A1737AH	
L302	LD-252 3A1737AH	
L360	LB-1226 KY1107R	
L361	LB-1226 KY1107R	
PG001	PG-185 IMSA-9215H-T	
Q201	DB-792 2SC2314F	
Q202	DB-301 2SC941TM-O	
Q209	DB-867 2SC3243-T11-E	
Q308	DB-867 2SC3243-T11-E	
R060	100K 1/4W	
R086	4.7 3WS	
R218	82 1WS	
R219	82 1WS	
R220	100 1WS	
R335	10K 1/6W	
R338	10K 1/6W	
R340	10K 1/6W	

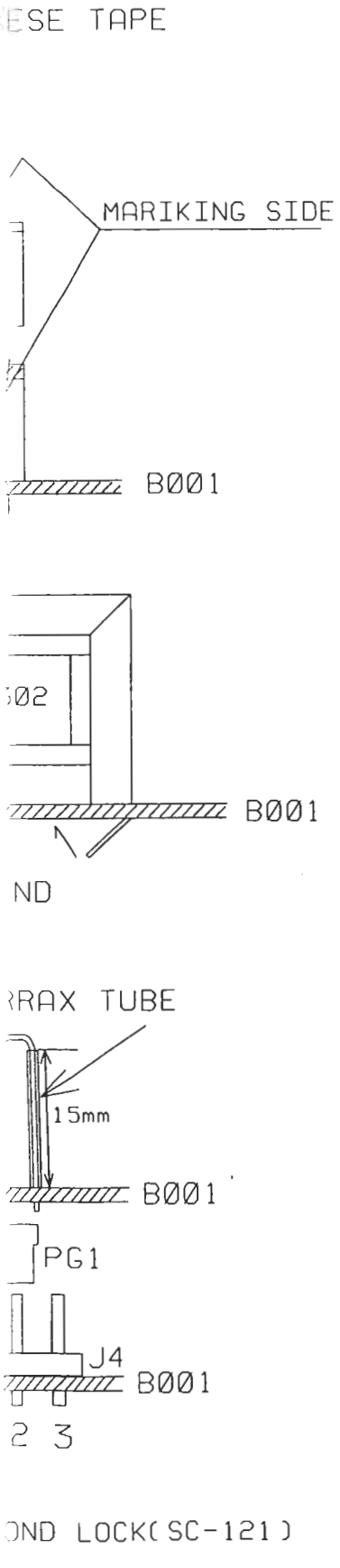

C004	4.7UF 50V	C-0156
C011	1UF 50V	C-0156
C021	0.47UF 50V	C-0156
C030	47UF 25V	C-0156
C031	47UF 25V	C-0156
C043	470UF 25V	C-0156
C044	47UF 25V	C-0156
C047	47UF 25V	C-0156
C065	47UF 25V	C-0156
C235	1000UF 16V	C-0156
C245	220UF 10V	C-0156
C253	47UF 25V	C-0156
C310	47UF 25V	C-0156
C312	470UF 10V	C-0156
C315	1000UF 25V	C-0156
C317	220UF 10V	C-0156
C320	220UF 10V	C-0156
C350	220UF 10V	C-0156
C366	22UF 50V	C-0156
CT301	CT-090 ECR-LA050M52 50PF	
D204	GD 1N4003-A2	
D304	SB340	
FT001	FL-055 10M07AZ	
FT002	FL-852 LTS455HTW	
J003	JK-899 JH3501-020D	
J004	JK-1249 IMSA-9210B-1-03Z0	
L001	LB-1131 KS2484F	
L002	LB-1153 KS2485NC	
L003	LB-1227 KS2553N	
L004	LB-1120 KS2482AC	
L006	LB-1129 7PL4A151N	
L007	LB-1179 7MK4A033N	
L010	LD-087 BF04-3*5*1	
L011	LD-087 BF04-3*5*1	
L201	LE-475 AC1979	
L202	LE-486 AC1973	
L203	LE-486 AC1973	
L204	LE-475 AC1979	
L205	LC-255 MD146-08F42	
L206	LD-252 3A1737RH	
L207	LD-087 BF04-3*5*1	
L208	LE-535	
L209	LD-087 BF04-3*5*1	
L210	LZ-041 0.33UH	
L211	LD-087 BF04-3*5*1	
L301	LD-252 3A1737RH	
L302	LD-252 3A1737RH	
L360	LB-1226 KY1107R	
L361	LB-1226 KY1107R	
PG001	PG-185 IMSA-9215H-T	
Q201	DB-792 2SC2314F	
Q202	DB-301 2SC941TM-D	
Q209	DB-867 2SC3243-T11-E	
Q308	DB-867 2SC3243-T11-E	
R060	100K 1/4W	
R086	4.7 3WS	
R218	82 1WS	
R219	82 1WS	
R220	100 1WS	
R335	10K 1/6W	
R338	10K 1/6W	
R340	10K 1/6W	

R378	10K 1/4W
R395	56 1WS
R398	10K 1/4W
T301	TF-157
T302	TF-215
TP001	TP-122 1820-01-PP1
W001	UL1007 #24 10-140-3 GRY
W002	UL1007 #24 10-140-3 WHT
W003	UL1571 #26 5-30-5 WHT
X301	QX-796 4.258996MHz
X302	QX-074 10.240MHz

NOTES:

1. RESISTANCE VALUES ARE SHOWN IN OHMS UNLESS OTHERWISE NOTED. (K-KILO OHM. M-MEG OHM)
2. CAPACITANCE VALUES ARE INDICATED IN MICRO FARADS UNLESS OTHERWISE NOTED.

DESIGN. BY	DRAWN. BY	UNIDEN NO.	MODEL NO.
		UT371ZH	JOHNNY II ASC
		TITLE MAIN PCB	
CHECK. BY	APPRO. BY	PARTS ASS'Y TOP VIEW	
		DRAWING NO.	
REV. NO.		UNIDEN CORP.	

3C

B001: PA-435AA 1/4 (TOP VIEW)

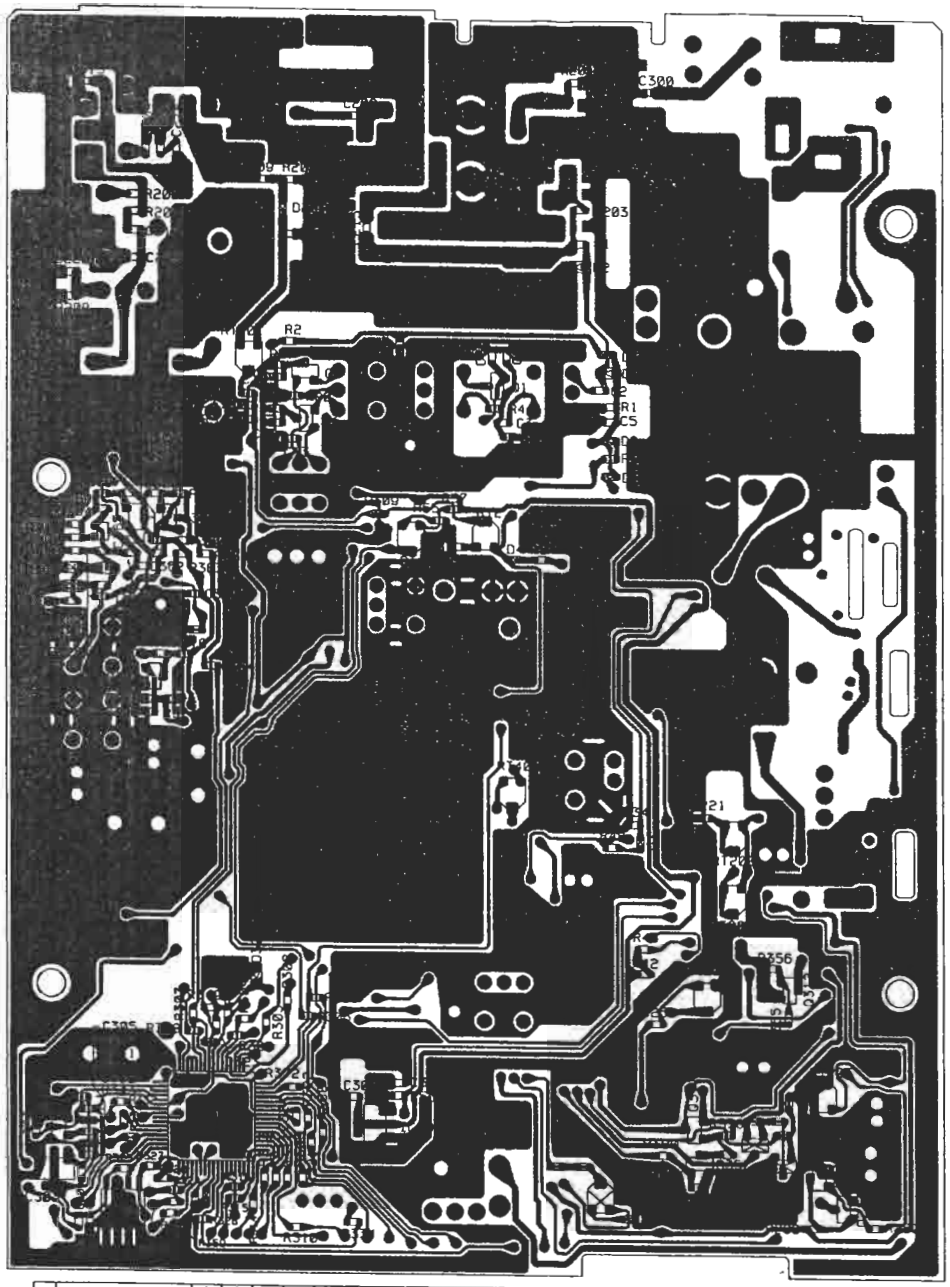

REVISIONS																					
REV. CODE	△	△	△	△	△	△	△	△	△	△	△	△	△	△	△	△	△	△	△	△	△
DATE																					
LOT#/RN#																					
REVISED BY																					
CHECKED BY																					

4A

DESIGN. BY	DRAWN. BY	UNIDEN NO. UT3712H	MODEL NO. JOHNNY II ASC
		TITLE MAIN PCB 1/2 CHIP LAYOUT TOP VIEW	
CHECK. BY	APPRO. BY		
		DRAWING NO.	
REV. NO.		UNIDEN CORP.	

B001: PA-435AA 1/4 (TOP VIEW)

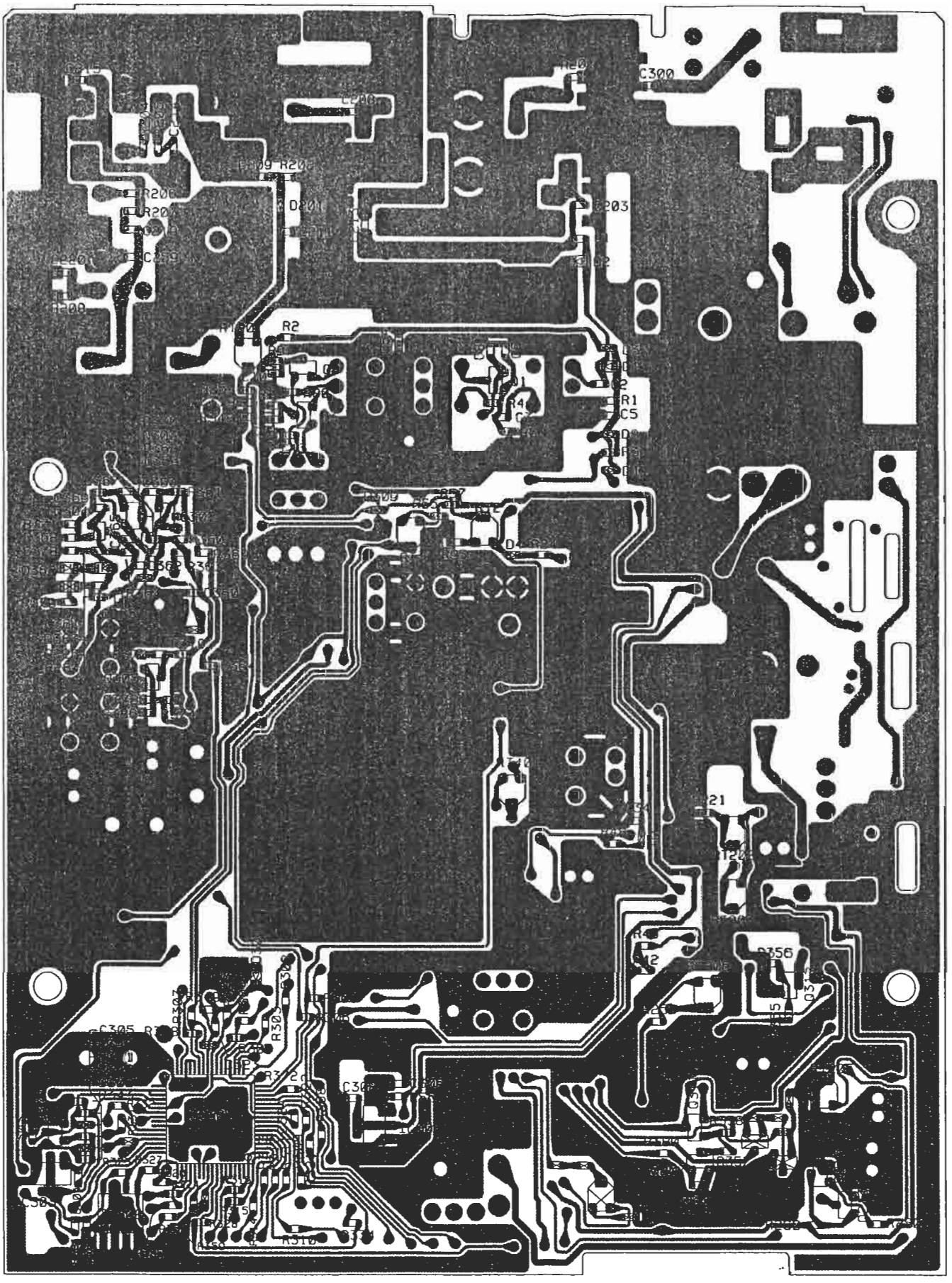

REVISIONS																				
REV. CODE	△	△	△	△	△	△	△	△	△	△	△	△	△	△	△	△	△	△	△	△
DATE																				
LOT#/RN#																				
REVISED BY																				
CHECKED BY																				

DESIGN. BY	DRAWN. BY	UNIDEN NO.	M
		UT371ZH	J
		TITLE MAIN PCB CHIP LAYOUT	
CHECK. BY	APPRO. BY		
		DRAWING NO.	
REV. NO.		UNIDE	

4A

6001 : PA-455HH 1/4 (BOTTOM VIEW)

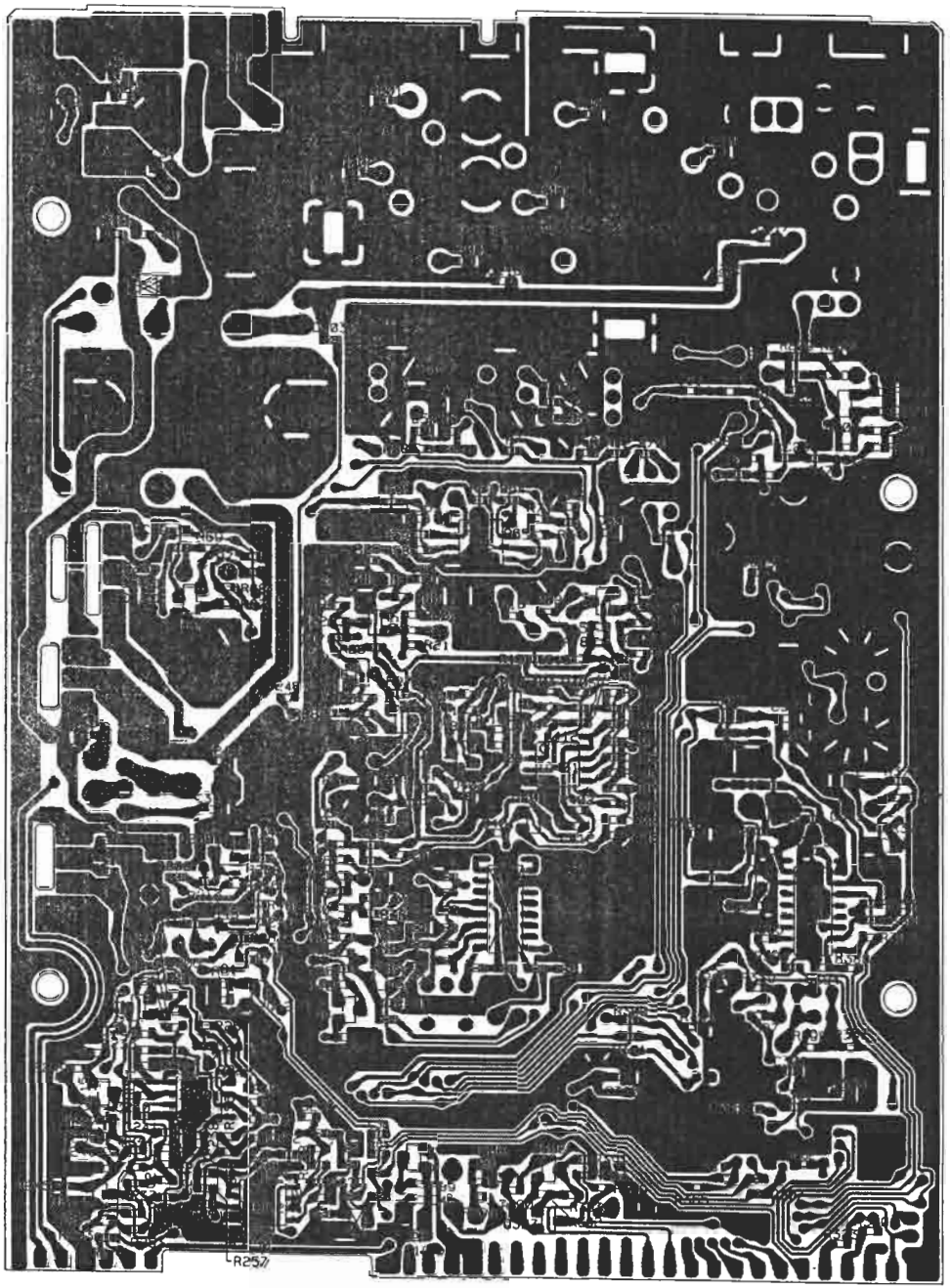

REVISIONS																				
	REV. CODE	△	△	△	△	△	△	△	△	△	△	△	△	△	△	△	△	△	△	△
	DATE																			
	LOT#/RN#																			
	REVISED BY																			
	CHECKED BY																			

5A

DESIGN. BY	DRAWN. BY	UNIDEN NO. UT371ZH	MODEL NO. JOHNNY II ASC
CHECK. BY	APPRO. BY	TITLE MAIN PCB 1/2 CHIP LAYOUT BOTTOM VIEW	
		DRAWING NO.	
REV. NO.		UNIDEN CORP.	

B001 : PA-435AA 1/4 (BOTTOM VIEW)

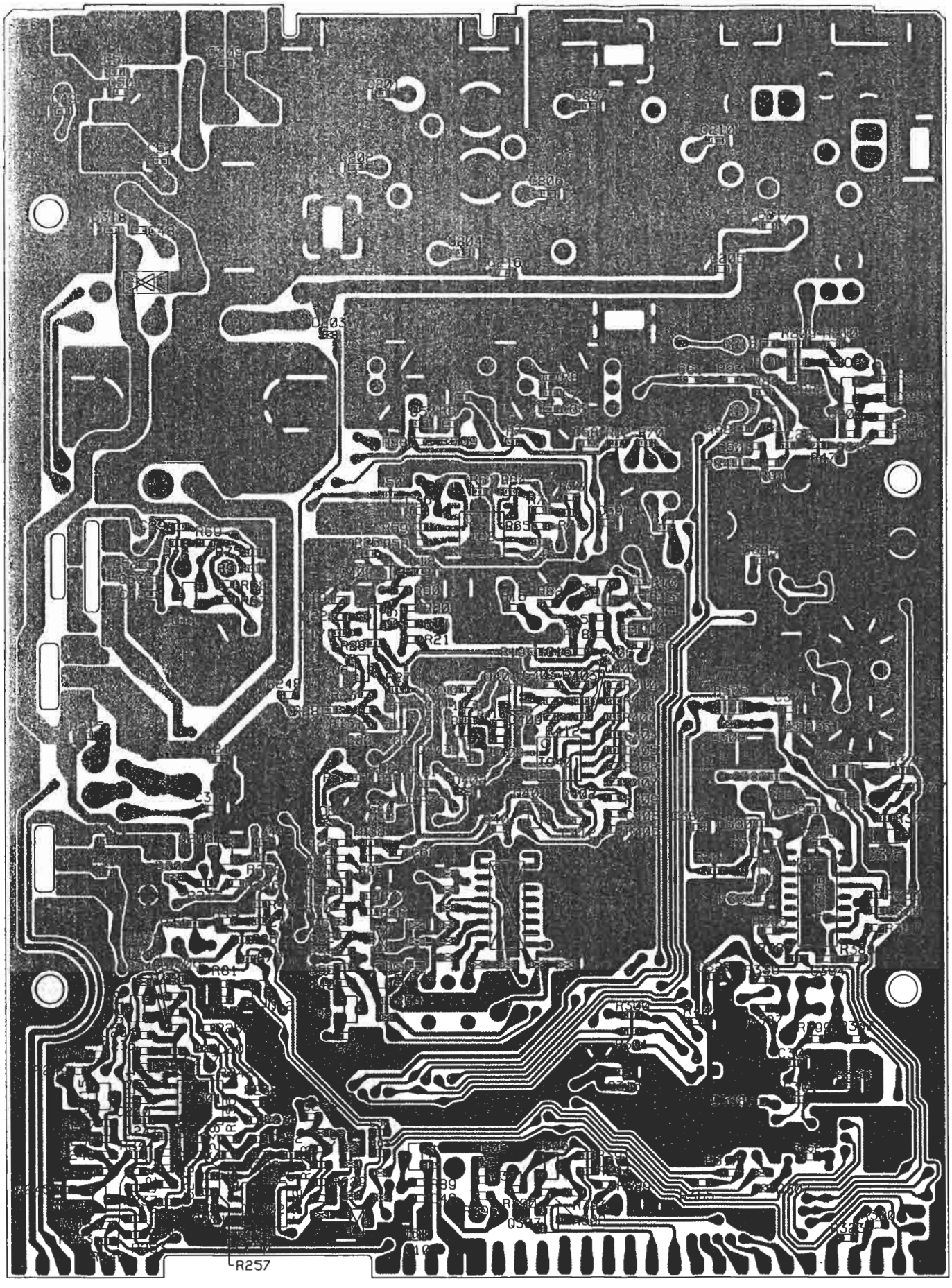

REVISIONS																				
REV. CODE	△	△	△	△	△	△	△	△	△	△	△	△	△	△	△	△	△	△	△	△
DATE																				
LOT#/RN#																				
REVISED BY																				
CHECKED BY																				

DESIGN. BY	DRAWN. BY	UNIDEN NO. UT371ZH
		TITLE MAIN P
CHECK. BY	APPRO. BY	CHIP LAYOUT
		DRAWING NO.
REV. NO.		UNI

5A