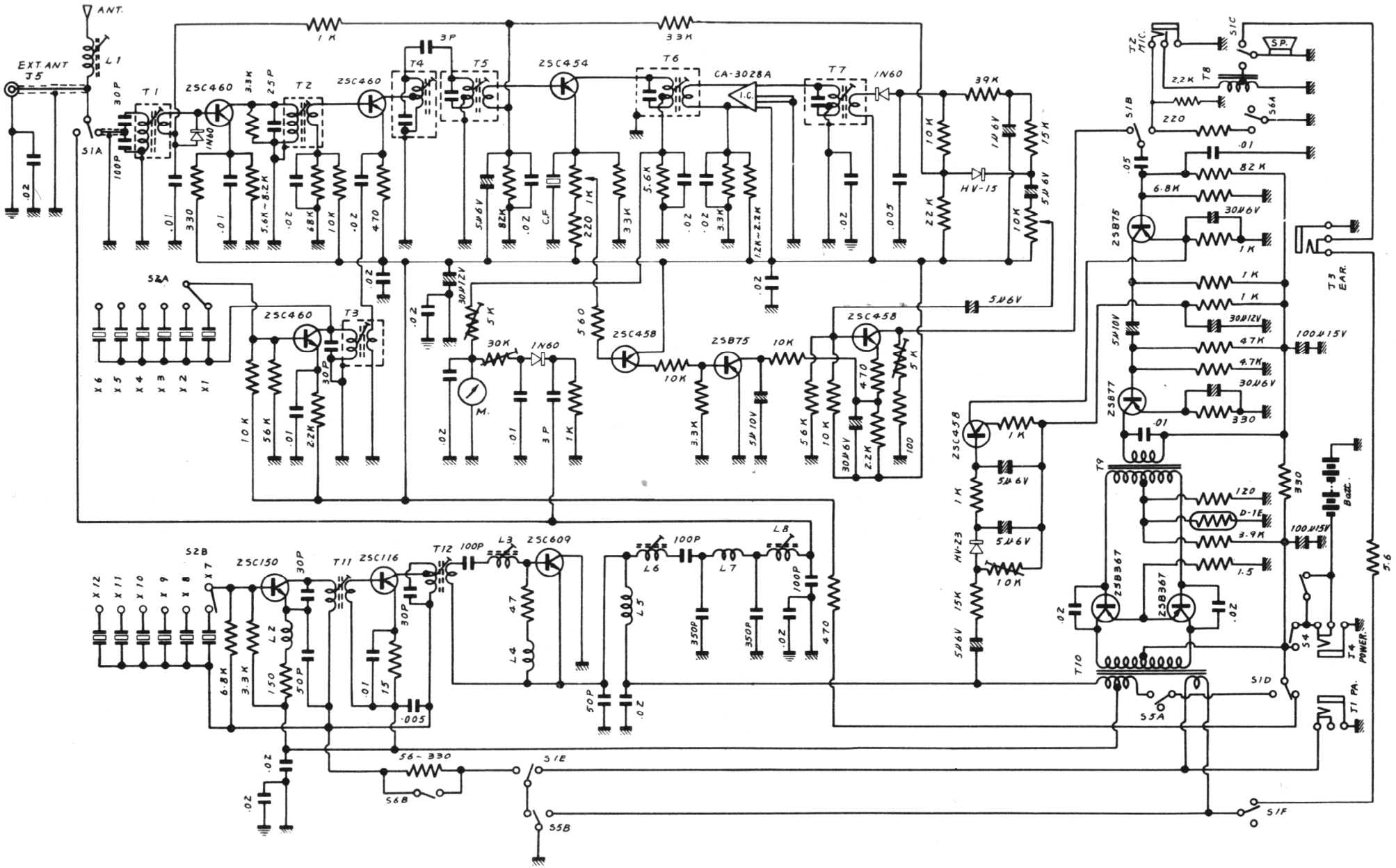
ANT.
EXT. ANT
J5
L1
S1A
T1
2SC460
T2
2SC460
T4
T5
2SC454
T6
CA-3028A
I.C.
T7
1N60
39K
HV-15
S2A
2SC460
T3
2SC458
2SB75
2SC458
M.
S2B
2SC150
T11
2SC116
T12
L3
2SC609
L6
L7
L8
L5
L4
L2
56~330
S6B
S1E
S5B
S1F
2SC458
HV-23
T10
2SB367
2SB367
T9
2SB77
2SB75
T8
T2 MIC.
S1C
S.P.
S6A
S1B
T3 EAR.
Batt.
S4
T4 POWER.
S1D
S5A
T1 PA.
X1
X2
X3
X4
X5
X6
X7
X8
X9
X10
X11
X12