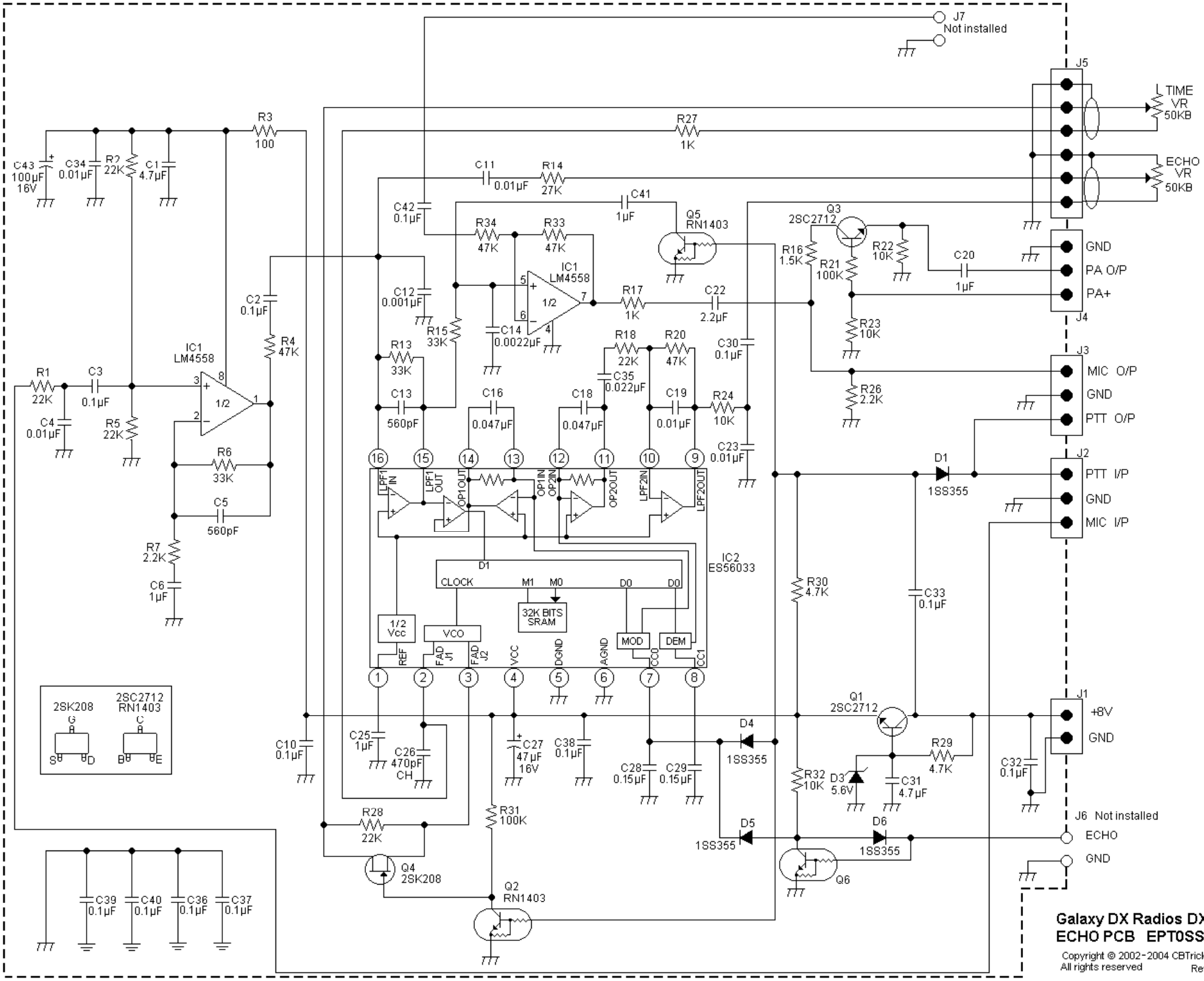
J7
Not installed
J5
TIME
VR
50KB
ECHO
VR
50KB
R3
100
R27
1K
C43
100µF
16V
C34
0.01µF
R2
22K
C1
4.7µF
C11
0.01µF
R14
27K
C41
1µF
C42
0.1µF
Q5
RN1403
R34
47K
R33
47K
IC1
LM4558
1/2
Q3
2SC2712
R16
1.5K
R21
100K
R22
10K
C20
1µF
GND
PA O/P
PA+
J4
C12
0.001µF
R15
33K
C14
0.0022µF
R17
1K
C22
2.2µF
R23
10K
C2
0.1µF
R4
47K
IC1
LM4558
1/2
R13
33K
R18
22K
R20
47K
C35
0.022µF
C30
0.1µF
J3
MIC O/P
GND
PTT O/P
R26
2.2K
R1
22K
C3
0.1µF
C4
0.01µF
R5
22K
C13
560pF
C16
0.047µF
C18
0.047µF
C19
0.01µF
R24
10K
C23
0.01µF
R6
33K
C5
560pF
R7
2.2K
C6
1µF
LPF1 IN
LPF1 OUT
OP1OUT
OP1IN
OP2IN
OP2OUT
LPF2IN
LPF2OUT
D1
1SS355
J2
PTT I/P
GND
MIC I/P
IC2
ES56033
CLOCK
M1
M0
D0
D0
32K BITS SRAM
1/2 Vcc
VCO
MOD
DEM
REF
FAD J1
FAD J2
VCC
DGND
AGND
CCO
CC1
R30
4.7K
C33
0.1µF
2SK208
2SC2712
RN1403
Q1
2SC2712
J1
+8V
GND
C10
0.1µF
C25
1µF
C26
470pF
CH
C27
47µF
16V
C38
0.1µF
C28
0.15µF
C29
0.15µF
D4
1SS355
R29
4.7K
R32
10K
D3
5.6V
C31
4.7µF
C32
0.1µF
R28
22K
R31
100K
D5
1SS355
D6
1SS355
J6 Not installed
ECHO
GND
Q4
2SK208
Q2
RN1403
Q6
C39
0.1µF
C40
0.1µF
C36
0.1µF
C37
0.1µF
Galaxy DX Radios DX44V
ECHO PCB EPT0SSB51J
Copyright © 2002-2004 CBTricks.com
All rights reserved
Rev. 1.2