CIRCUIT DIAGRAM FOR COBRA 46XLR

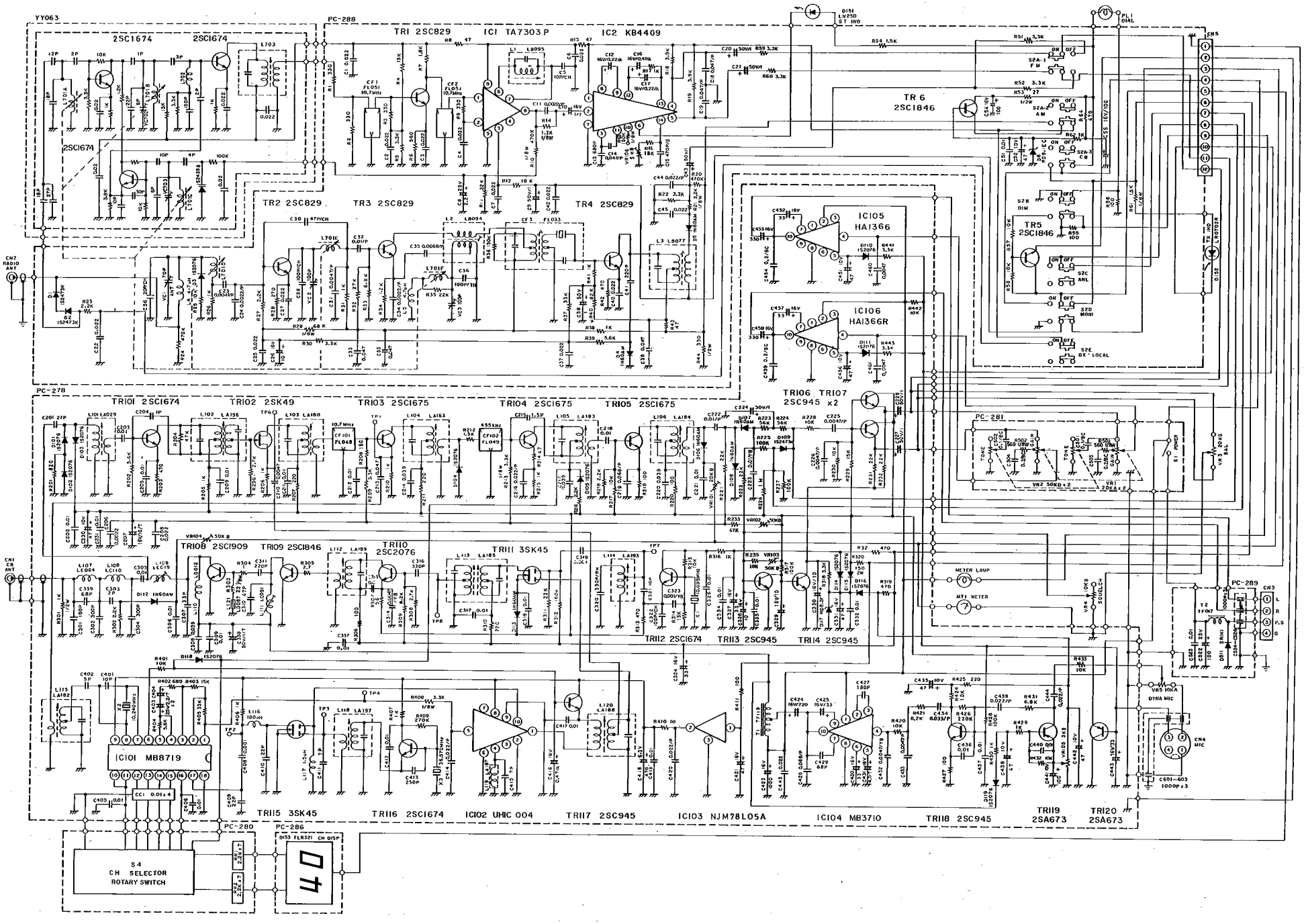

BILL OF MATERIAL FOR COBRA 46XLR

CIRCUIT SYMBOL	DESCRIPTION	DYNASCAN PART NO.
	IC, TRANSISTORS & DIODES	
IC-1	Integrated Circuit TA7303P	307-128-9-001
IC-2	Integrated Circuit KB4409	307-120-9-002
IC-101	Integrated Circuit MB8719	307-128-9-002
IC-103	Integrated Circuit NJM78L05A	307-113-9-003
IC-104	Integrated Circuit MB 3710	307-128-9-003
IC-102	Integrated Circuit UHIC-004	307-113-9-002
IC-105	Integrated Circuit HA1366	307-128-9-004
IC-106	Integrated Circuit HA1366R	307-128-9-005
TR-112,116	Transistor 2SC1674-K NPN, Sil.	176-081-9-001
TR-101	Transistor 2SC1674-L NPN, Sil.	176-081-9-002
TR-104	Transistor 2SC1675-L NPN, Sil.	176-065-9-001
TR-103,105	Transistor 2SC1675-K NPN, Sil.	176-081-9-003
TR-113,114,117	Transistor 2SC945A-P NPN, Sil.	176-060-9-003
TR-106,107,118	Transistor 2SC945A-Q NPN, Sil.	176-062-9-001
TR-1,2,3,4	Transistor 2SC829-B NPN, Sil. (Signal)	176-075-9-002
TR-108	Transistor 2SC1909 NPN, Sil. (Signal)	176-081-9-004
TR-109,5,6	Transistor 2SC1846-Q NPN, Sil. (Signal)	176-075-9-006
TR-110	Transistor 2SC2076-C NPN, Sil. (Signal)	176-060-9-004
TR-119,120	Transistor 2SA673-C PNP, Silicon	177-025-9-001
TR-102	F. E. T. 2SK49-F	182-048-9-001
TR-111,115	F. E. T. 3SK45-B	182-038-9-001
D-4,5,106,107,108,112, 113	Diode, Germanium 1N60AM	150-014-9-001
D-3,118,119,101,102, 103,104,105,114,115, 116,110,111	Diode, Silicon 1S2076	151-067-9-001
D-51	Diode, Silicon Rectifier SR1K-1	151-040-9-003
D-1,2,109	Diode, Silicon Rectifier 1S2473K	151-069-9-001
D-6	Diode, Zener RD9. 1 FC	152-085-9-001
D-117	Diode, Zener RD8. 2 FC	152-085-9-002
D-152	L. E. D. Lamp LR0702R	151-064-9-003
D-153	L. E. D. Numeric Display TLR321	158-014-9-001
D-151	L. E. D. Lamp 1N25D	158-016-9-001
	COILS & TRANSFORMERS	
L-101	Coil LA-029	066-017-9-001
L-102	Coil LA-197	060-027-9-001
L-104	Coil LA-163	060-022-9-001
L-103	Coil LA-180	060-024-9-001
L-115	Coil LA-182	060-024-9-003
L-105	Coil LA-183	060-024-9-004
L-106	Coil LA-184	060-024-9-005
L-113	Coil LA-185	060-024-9-006
L-118	Coil LA-196	060-027-9-002
L-119	Coil LA-187	060-024-9-008
L-120	Coil LA-188	060-024-9-009
L-112	Coil LA-189	060-024-9-010
L-114	Coil LA-193	060-024-9-011
L-2	Coil LB-094	046-020-9-001

CIRCUIT SYMBOL	DESCRIPTION	DYNASCAN PART NO.
	COILS & TRANSFORMERS (Continued)	
L-3	Coil LB-077	046-019-9-004
L-1	Coil LB-095	046-020-9-002
L-111	Coil LC-051	041-094-9-001
L-109	Coil LC-019	041-088-9-001
L-108	Coil LC-110	041-078-9-001
L-107	Coil LE-064	041-093-9-001
L-110	Coil LD-012	044-028-9-003
L-17	RF Choke Coil LZ-002 1μH	041-062-9-001
L-16	RF Choke Coil LZ-012 100μH	041-087-9-002
L-4,5	RF Choke Coil LZ-002 4.7μH	041-088-9-002
T-2	AF Choke Coil TF-017	042-014-9-001
T-1	Modulator Transformer TF-119	061-037-9-001
	VARIABLE RESISTORS & VARIABLE CAPACITOR	
VR-105	Variable Resistor, Semi-Fixed RV-189 3K B	008-323-9-001
VR-102,104,103	Variable Resistor, Semi-Fixed RV-189 50K B	008-316-9-002
VR-106	Variable Resistor, Semi-Fixed RV-189 5K B	008-316-9-004
VR-101	Variable Resistor, Semi-Fixed RV-189 20K B	008-316-9-003
VR-1 + VR-2 +S1	Variable Resistor RV-262 Vol/Tone/Power	008-323-9-002
VR-3 + Tuning	Variable Resistor RV-265 Bal/Tune	008-323-9-003
VR-5 + VR-4	Variable Resistor RV-267 SQ/Dynamike	008-323-9-004
VC-1,2,3	Variable Capacitor, Semi-Fixed CV-021 70pF	028-047-9-001
	RESISTORS	
R-320	Resistor, Metal Film 2W 150 ohm 5%	013-026-9-001
R-44	Resistor, Carbon Film 1/2W 330 ohm 5%	001-102-5-331
R-301	Resistor, Carbon Film 1/2W 1K ohm 5%	001-102-5-102
R-304	Resistor, Carbon Film 1/4W 1 ohm 5%	002-104-5-010
R-305	Resistor, Carbon Film 1/4W 2.7 ohm 5%	002-104-5-279
R-410	Resistor, Carbon Film 1/4W 10 ohm 5%	002-104-5-100
R-214	Resistor, Carbon Film 1/4W 33 ohm 5%	002-104-5-330
R-15,43,303	Resistor, Carbon Film 1/4W 47 ohm 5%	002-104-5-470
R-307	Resistor, Carbon Film 1/4W 56 ohm 5%	002-104-5-560
R-53	Resistor, Carbon Film 1/4W 39 ohm 5%	002-104-5-390
R-208,219,220,55,411, 427,8,56,306	Resistor, Carbon Film 1/4W 100 ohm 5%	002-104-5-101
R-211,310,425	Resistor, Carbon Film 1/4W 220 ohm 5%	002-104-5-221
R-28	Resistor, Carbon Film 1/4W 270 ohm 5%	002-104-5-271
R-201,3,9	Resistor, Carbon Film 1/4W 330 ohm 5%	002-104-5-331
R-2	Resistor, Carbon Film 1/4W 390 ohm 5%	002-104-5-391
R-313,319,321,203	Resistor, Carbon Film 1/4W 470 ohm 5%	002-104-5-471
R-6,42,501,502	Resistor, Carbon Film 1/4W 560 ohm 5%	002-104-5-561
R-402	Resistor, Carbon Film 1/4W 680 ohm 5%	002-104-5-681
R-205,206,210,215,316, 406,407,429,430,7,17, 26,31,38,41	Resistor, Carbon Film 1/4W 1K ohm 5%	002-104-5-102
R-62,212,54,61	Resistor, Carbon Film 1/4W 1.5K ohm 5%	002-104-5-152
R-1,34	Resistor, Carbon Film 1/4W 1.8K ohm 5%	002-104-5-182
R-216,218,302,5,23,7	Resistor, Carbon Film 1/4W 2.2K ohm 5%	002-104-5-222
R-308	Resistor, Carbon Film 1/4W 2.7K ohm 5%	002-104-5-272

CIRCUIT SYMBOL	DESCRIPTION	DYNASCAN PART NO.
	RESISTORS (Continued)	
R-30,59,60,51,52,209, 318,441,443	Resistor, Carbon Film 1/4W 3.3K ohm 5%	002-104-5-332
R-18,19	Resistor, Carbon Film 1/4W 3.9K ohm 5%	002-104-5-392
R-424,202,404,22,39	Resistor, Carbon Film 1/4W 5.6K ohm 5%	002-104-5-562
R-14,431	Resistor, Carbon Film 1/4W 6.8K ohm 5%	002-104-5-682
R-12,421	Resistor, Carbon Film 1/4W 8.2K ohm 5%	002-104-5-822
R-420,217,228,230,314, 315,401,432,433,442, 25,33, 57,58,13	Resistor, Carbon Film 1/4W 10K ohm 5%	002-104-5-103
R-311	Resistor, Carbon Film 1/4W 12K ohm 5%	002-104-5-123
R-309,403,4,16,229	Resistor, Carbon Film 1/4W 15K ohm 5%	002-104-5-153
R-221,222,231,232,32, 35	Resistor, Carbon Film 1/4W 22K ohm 5%	002-104-5-223
R-405,37,233	Resistor, Carbon Film 1/4W 33K ohm 5%	002-104-5-333
R-11,204	Resistor, Carbon Film 1/4W 47K ohm 5%	002-104-5-473
R-223,224,225,237	Resistor, Carbon Film 1/4W 56K ohm 5%	002-104-5-563
R-36,426	Resistor, Carbon Film 1/4W 150K ohm 5%	002-104-5-154
R-317,428,40	Resistor, Carbon Film 1/4W 100K ohm 5%	002-104-5-104
R-312	Resistor, Carbon Film 1/4W 180K ohm 5%	002-104-5-184
R-409	Resistor, Carbon Film 1/4W 270K ohm 5%	002-104-5-274
R-20,24	Resistor, Carbon Film 1/4W 470K ohm 5%	002-104-5-474
R-226	Resistor, Carbon Film 1/4W 680K ohm 5%	002-104-5-684
R-403	Resistor, Carbon Film 1/8W 3.3K ohm 5%	002-108-5-332
R-21	Resistor, Carbon Film 1/8W 47K ohm 5%	002-108-5-472
R-10	Resistor, Carbon Film 1/8W 150K ohm 5%	002-108-5-154
R-207	Resistor, Carbon Film 1/8W 220 ohm 5%	002-108-5-221
R-213	Resistor, Carbon Film 1/8W 3.3K ohm 5%	002-108-5-332
R-29	Resistor, Carbon Film 1/8W 82K ohm 5%	002-108-5-823
	CAPACITORS	
CZ-037	Ceramic Feed-Through Capacitors A'ssy 50W V 1000pF +80 -20% x 3	033-032-9-001
CZ-039	Ceramic Feed-Through Capacitors Ass'y 50W V 1000pF +80 -20% x 3	033-032-9-002
C-9,20,21,43,224,227, 228,329,443	Capacitor, Electrolytic 50WV 1μF	022-157-9-002
C-315,8	Capacitor, Electrolytic 25WV 2.2μF	022-158-9-002
C-407	Capacitor, Electrolytic 50WV 4.7μF	022-161-9-001
C-26,207,328,330,451, 456	Capacitor, Electrolytic 16WV 10μF	022-157-9-004
C-438	Capacitor, Electrolytic 10WV 33μF	022-158-9-005
C-324,327,425,430,452, 457,229	Capacitor, Electrolytic 16WV 33μF	022-157-9-006
C-435,442,230	Capacitor, Electrolytic 10V 47μF	002-120-9-002
C-331,421	Capacitor, Electrolytic 16V 47μF	022-155-9-001
C-441	Capacitor, Electrolytic 10V 100μF	022-157-9-008
C-424	Capacitor, Electrolytic 16V 220μF	022-122-9-008
C-453,458	Capacitor, Electrolytic 16V 330μF	022-158-9-003
C-418	Capacitor, Electrolytic 6.3V 470μF	022-158-9-008
C-423	Capacitor, Electrolytic 16V 1000μF	022-152-9-002
C-52	Capacitor, Electrolytic 16V 100μF	022-157-9-009
C-522	Capacitor, Electroltyic 25V 100μF	022-155-9-002

CIRCUIT SYMBOL	DESCRIPTION	DYNASCAN PART NO.
	CAPACITORS (Continued)	
C-12,17	Capacitor, Aluminum Solid 16V 0.22μF 20%	022-158-9-001
C-16,416	Capacitor, Aluminum Solid 16V 0.47μF 20%	022-161-9-002
C-503,504	Capacitor, Tantalum 6.3V 0.47μF 20%	027-027-9-001
C-10,38	Capacitor, Tantalum 16V 1μF 20%	027-027-9-002
C-403,404	Capacitor, Tantalum 25V 2.2μF 20%	027-021-9-001
C-431	Capacitor, Tantalum 16V 4.7μF 20%	027-026-9-004
C-36	Capacitor, Polystyrene Film 50V 180pF 10%	030-041-9-001
C-15	Capacitor, Polystyrene Film 50V 470pF 10%	030-041-9-002
C-24,34	Capacitor, Polystyrene Film 50V 0.0022μF 10%	030-041-9-003
C-433,226,31,23,434	Capacitor, Polyester Film 50V 0.0047μF 10%	025-126-9-001
C-35	Capacitor, Polyester Film 50V 0.0068μF 10%	025-122-9-003
C-222,32	Capacitor, Polyester Film 50V 0.01μF 10%	025-121-9-002
C-439,216,225,414,420, 444	Capacitor, Polyester Film 50V 0.022μF 10%	025-121-9-003
C-18,19	Capacitor, Polyester Film 50V 0.033μF 10%	025-121-9-004
C-44	Capacitor, Polyester Film 50V 0.039μF 10%	025-121-9-005
C-14	Capacitor, Polyester Film 50V 0.047μF 10%	025-121-9-006
C-219,428	Capacitor, Polyester Film 50V 0.068μF 10%	025-125-9-001
C-501,502	Capacitor, Polyester Film 50V 0.1μF 10%	025-121-9-001
C-204	Capacitor, Ceramic Disk 50V 1pF ±0.25pF SL	020-180-9-001
C-215,303	Capacitor, Ceramic Disk 50V 2pF ±0.25pF SL	020-187-9-001
C-402,411	Capacitor, Ceramic Disk 50V 5pF ±0.5pF SL	020-187-9-002
C-415	Capacitor, Ceramic Disk 50V 7pF ±1pF SL	020-187-9-003
C-321,401	Capacitor, Ceramic Disk 50V 10pF ±1pF SL	020-187-9-004
C-409,410	Capacitor, Ceramic Disk 50V 47pF 5% SL	020-181-9-010
C-201	Capacitor, Ceramic Disk 50V 27pF 5% SL	020-187-9-005
C-307	Capacitor, Ceramic Disk 50V 33pF 5% SL	020-187-9-006
C-310,427,429,339	Capacitor, Ceramic Disk 50V 68pF 5% SL	020-178-9-009
C-301	Capacitor, Ceramic Disk 50V 180pF 10% SL	020-148-9-002
C-41	Capacitor, Ceramic Disk 50V 150pF 10% SL	020-181-9-012
C-311,11	Capacitor, Ceramic Disk 50V 220pF 10% SL	020-125-9-005
C-312,413	Capacitor, Ceramic Disk 50V 250pF 10% SL	020-181-9-007
C-316	Capacitor, Ceramic Disk 50V 330pF 10% SL	020-181-9-008
C-13	Capacitor, Ceramic Disk 50V 680pF 10% SL	020-187-9-007
C-302,304	Capacitor, Ceramic Disk 50V 300pF 10% SL	020-187-9-008
C-30	Capacitor, Ceramic Disk 50V 47pF 5% SL	020-187-9-009
C-5	Capacitor, Ceramic Disk 50V 10pF ±1pF CH	020-187-9-010
C-322,28	Capacitor, Ceramic Disk 50V 100pF 10% CH	020-187-9-011
C-320	Capacitor, Ceramic Disk 50V 330pF 10% RH	020-181-9-015
C-323	Capacitor, Ceramic Disk 25V 0.001μF 10% YB	020-181-9-022
C-454,459	Capacitor, Ceramic Disk 12V 0.2μF +80% -20% BC	020-187-9-012
C-408,319	Capacitor, Ceramic Disk 25V 0.001μF +80% -20% YG	020-180-9-020
C-206	Capacitor, Ceramic Disk 25V 0.0022μF +80% -20% YG	020-178-9-019
C-461,221,223,210,460	Capacitor, Ceramic Disk 25V 0.0047μF +80% -20% YG	020-187-9-013
C-202,203,205,209,211, 309,313,317,318,326, 332,405,406,412,417, 419,436,437,440,51, 523, 231	Capacitor, Ceramic Disk 25V 0.01μF +80% -20% YG	020-180-9-023

CIRCUIT SYMBOL	DESCRIPTION	DYNASCAN PART NO.
	CAPACITORS (Continued)	
C-432,314	Capacitor, Ceramic Disk 25V 0.0047μF +80% -20% YB	020-187-9-014
C-208,325,1,2,3,4,6,7, 22,25,27,37,40,45,42, 445	Capacitor, Ceramic Disk 25V 0.022μF +80% -20% YG	020-181-9-019
C-214,217,220,308	Capacitor, Ceramic Disk 25V 0.039μF +80% -20% YG	020-181-9-020
C-213,33,39	Capacitor, Ceramic Disk 25V 0.047μF +80% -20% YG	020-181-9-021
CC-1	Capacitor Array 50V 1000pF x 5 HA-003	527-077-9-002
RR-1,2	Resistor Array 1/8W 2.2K ohm x 7 HA-009	527-079-9-001
	CRYSTALS	
X-2	Quarz Crystal QX-077 10.240 MHz	133-014-9-001
X-1	Quarz Crystal QX-078 10.695 MHz	133-014-9-002
X-3	Quarz Crystal QX-079 36.570 MHz	133-014-9-003
	MISCELLANEOUS	
CF-101	Ceramic Filter FL-048	140-020-9-001
CF-102	Ceramic Filter FL-049, 455 kHz (1F-CB)	140-018-9-002
CF-3	Ceramic Filter FL-033	140-020-9-002
CF-1,2	Ceramic Filter FL-056	140-020-9-003
S2A-E	Switch, Pushbutton SW-108 FM/AM/CB/DIM/ANL/ Moni/DX	088-037-9-001
S-4	Switch, Rotary SR-182 Channel	083-228-9-001
MT-1	Meter MT-087	320-092-9-001
	Microphone, Dynamic MK-064	562-020-9-001
PL-1	Lamp with Leads, PL-005	400-049-9-001
TP-1,2,3,4,5,6,7,8	Test Point Terminal TP-020	757-028-9-001
	Pushbutton Tuner Ass'y, FM Front End YY-063	523-204-9-001
CN-5	Connector Wafer Ass'y 12P, PG-038	523-204-9-002
	Noise Suppression Capacitor, 0.47μF CZ-031	033-032-9-003
CN-1	CB Antenna Cord Ass'y. WZ-024	426-023-9-001
CN-2	Radio Antenna Cord Ass'y WZ-070176	426-026-9-001
CN-4	Microphone Cord Ass'y WZ-041	426-026-9-002
	Speaker & Power Cord Ass'y WZ-042	426-026-9-003
CN-3	Speaker & Power Cord Ass'y W-070171	426-026-9-004
	Wire Nut YY-008	763-092-9-001
	"A" Lead Adaptor With Spade Terminal	426-026-9-005
	Ground Wire W-070153	426-026-9-006
S-10	Noise Suppression Resistor, 10K ohm RZ-004	013-026-9-002
2A	Spare Fuse FS-001, 2AMP	191-251-9-002
	Main Chassis	257-096-9-001
	Front Chassis	258-024-9-001
	Meter Bracket	251-320-9-001
	Rear Chassis	258-025-9-001
	Heat Sink for AF AMP.	747-055-9-001
	Heat Sink for RF AMP.	747-055-9-002
	Heat Sink for Modulator	747-055-9-003
	IC Mounting Bracket	251-321-9-001
	IC Mounting Spacer	759-078-9-001
	Noise Filter Shield Box	256-073-9-001

CIRCUIT SYMBOL	DESCRIPTION	DYNASCAN PART NO.
	MISCELLANEOUS (Continued)	
	Cord Clamp (A)	741-099-9-001
	Cord Clamp (B)	741-099-9-002
	Cover	253-061-9-001
	Channel Display Mounting Bracket	251-322-9-001
	Pointer Guide Ass'y	523-204-9-003
	Radio Chassis Ass'y	523-204-9-004
	String Tension Lever Ass'y	523-204-9-005
	Bearing Bracket Ass'y	523-204-9-006
	Attenna Trimmer Bracket Ass'y	523-204-9-007
	L Shaped Backup Plate	260-130-9-001
	Spade Terminal	765-012-9-001
	Microphone Connector Bracket	251-323-9-001
	Knob Spring for Ford Front Knob	767-051-9-001
	VR Mounting Bracket	261-073-9-001
	Perforated Mounting Strap	251-218-9-001
	Back Plate	260-131-9-001
	Lamp Holder	763-093-9-001
	Dial Pointer	763-093-9-002
	Microphone Hanger	741-074-9-001
	FCC Identification Plate	600-040-9-001
	Knob Inlay (Squelch)	260-132-9-001
	Decoration Panel (Dull Black)	260-133-9-001
	Decoration Panel (Wood Grain)	260-134-9-001
	Knob Inlay for Ford Front Knob (SPIN)	260-135-9-001
	Knob Inlay for STD Front Knob	600-034-9-002
	Knob Inlay for Ford Front Knob	260-136-9-001
	Insulator Sheet for Radio PCB	763-093-9-003
	Blind Seal	763-093-9-004
	Nose Piece	763-093-9-005
	Channel Selector Knob	751-154-9-001
	Squelch Knob	751-154-9-002
	Dynamike Knob	751-154-9-003
	CH. Display Holder	763-093-9-006
	Push Button "DIM"	384-022-9-001
	Push Button "ANL"	384-022-9-002
	Push Button "MON"	384-022-9-003
	Push Button "DX"	384-022-9-004
	Push Button "FM"	384-022-9-005
	Push Button "AM"	384-022-9-006
	Push Button "CB"	384-022-9-007
	Pinion	763-093-9-007
	Optical Filter Piece (Purple)	763-093-9-008
	Dial Scale Plate	260-137-9-001
	Foreign Car Trimplate	260-138-9-001
	Universal Trimplate	260-121-9-001
	Rubber Gasket	383-016-9-001
	Standard Front Knob	751-150-9-002
	Standard Rear Knob	751-150-9-001
	Ford Type Shallow Rear Knob	751-154-9-004
	Ford Type Shallow Front Knob	751-154-9-005
	Ford Type Deep Rear Knob	751-154-9-006
	LED Mounting Bush	380-291-9-001
	Pulley	743-005-9-001
	Gear	743-005-9-002
	Cord Bushing	380-291-9-002

CIRCUIT SYMBOL	DESCRIPTION	DYNASCAN PART NO.
	MISCELLANEOUS (Continued)	
	Tuner Shaft Ass'y	523-204-9-008
	Pinion Shaft Ass'y	523-204-9-009

CIRCUIT SYMBOL	DESCRIPTION	DYNASCAN PART NO.
	MISCELLANEOUS (Continued)	
	FCC Form 505	492-041-9-001
	FCC Form 555-B	492-046-9-001

L-119	Coil	LA-187		060-024-9-008
L-120	Coil	LA-188		060-024-9-009
L-112	Coil	LA-189		060-024-9-010
L-114	Coil	LA-193		060-024-9-011
L-2	Coil	LB-094		046-020-9-001

CIRCUIT SYMBOL	DESCRIPTION				DYNASCAN PART NO.
	RESISTORS (Continued)				
R-30,59,60,51,52,209, 318,441,443	Resistor, Carbon Film	1/4W	3.3K ohm	5%	002-104-5-332
R-18,19	Resistor, Carbon Film	1/4W	3.9K ohm	5%	002-104-5-392
R-424,202,404,22,39	Resistor, Carbon Film	1/4W	5.6K ohm	5%	002-104-5-562
R-14,431	Resistor, Carbon Film	1/4W	6.8K ohm	5%	002-104-5-682
R-12,421	Resistor, Carbon Film	1/4W	8.2K ohm	5%	002-104-5-822
R-420,217,228,230,314, 315,401,432,433,442, 25,33, 57,58,13	Resistor, Carbon Film	1/4W	10K ohm	5%	002-104-5-103
R-311	Resistor, Carbon Film	1/4W	12K ohm	5%	002-104-5-123
R-309,403,4,16,229	Resistor, Carbon Film	1/4W	15K ohm	5%	002-104-5-153
R-221,222,231,232,32, 35	Resistor, Carbon Film	1/4W	22K ohm	5%	002-104-5-223
R-405,37,233	Resistor, Carbon Film	1/4W	33K ohm	5%	002-104-5-333
R-11,204	Resistor, Carbon Film	1/4W	47K ohm	5%	002-104-5-473
R-223,224,225,237	Resistor, Carbon Film	1/4W	56K ohm	5%	002-104-5-563
R-36,426	Resistor, Carbon Film	1/4W	150K ohm	5%	002-104-5-154
R-317,428,40	Resistor, Carbon Film	1/4W	100K ohm	5%	002-104-5-104
R-312	Resistor, Carbon Film	1/4W	180K ohm	5%	002-104-5-184
R-409	Resistor, Carbon Film	1/4W	270K ohm	5%	002-104-5-274
R-20,24	Resistor, Carbon Film	1/4W	470K ohm	5%	002-104-5-474
R-226	Resistor, Carbon Film	1/4W	680K ohm	5%	002-104-5-684
R-403	Resistor, Carbon Film	1/8W	3.3K ohm	5%	002-108-5-332
R-21	Resistor, Carbon Film	1/8W	47K ohm	5%	002-108-5-472
R-10	Resistor, Carbon Film	1/8W	150K ohm	5%	002-108-5-154
R-207	Resistor, Carbon Film	1/8W	220 ohm	5%	002-108-5-221
R-213	Resistor, Carbon Film	1/8W	3.3K ohm	5%	002-108-5-332
R-29	Resistor, Carbon Film	1/8W	82K ohm	5%	002-108-5-823
	CAPACITORS				
CZ-037	Ceramic Feed-Through Capacitors A'ssy 50W V 1000pF +80 -20% x 3				033-032-9-001
CZ-039	Ceramic Feed-Through Capacitors Ass'y 50W V 1000pF +80 -20% x 3				033-032-9-002
C-9,20,21,43,224,227, 228,329,443	Capacitor, Electrolytic	50WV	1μF		022-157-9-002
C-315,8	Capacitor, Electrolytic	25WV	2.2μF		022-158-9-002
C-407	Capacitor, Electrolytic	50WV	4.7μF		022-161-9-001
C-26,207,328,330,451, 456	Capacitor, Electrolytic	16WV	10μF		022-157-9-004
C-438	Capacitor, Electrolytic	10WV	33μF		022-158-9-005
C-324,327,425,430,452, 457,229	Capacitor, Electrolytic	16WV	33μF		022-157-9-006
C-435,442,230	Capacitor, Electrolytic	10V	47μF		002-120-9-002
C-331,421	Capacitor, Electrolytic	16V	47μF		022-155-9-001
C-441	Capacitor, Electrolytic	10V	100μF		022-157-9-008
C-424	Capacitor, Electrolytic	16V	220μF		022-122-9-008
C-453,458	Capacitor, Electrolytic	16V	330μF		022-158-9-003
C-418	Capacitor, Electrolytic	6.3V	470μF		022-158-9-008
C-423	Capacitor, Electrolytic	16V	1000μF		022-152-9-002
C-52	Capacitor, Electrolytic	16V	100μF		022-157-9-009
C-522	Capacitor, Electroltyic	25V	100μF		022-155-9-002

CIRCUIT SYMBOL	DESCRIPTION				DYNASCAN PART NO.
	CAPACITORS (Continued)				
C-432,314	Capacitor, Ceramic Disk	25V	0.0047μF	+80% -20% YB	020-187-9-014
C-208,325,1,2,3,4,6,7, 22,25,27,37,40,45,42, 445	Capacitor, Ceramic Disk	25V	0.022μF	+80% -20% YG	020-181-9-019
C-214,217,220,308	Capacitor, Ceramic Disk	25V	0.039μF	+80% -20% YG	020-181-9-020
C-213,33,39	Capacitor, Ceramic Disk	25V	0.047μF	+80% -20% YG	020-181-9-021
CC-1	Capacitor Array	50V	1000pF x 5	HA-003...	527-077-9-002
RR-1,2	Resistor Array	1/8W	2.2K ohm x 7	HA-009...	527-079-9-001
	CRYSTALS				
X-2	Quarz Crystal QX-077 10.240 MHz				133-014-9-001
X-1	Quarz Crystal QX-078 10.695 MHz				133-014-9-002
X-3	Quarz Crystal QX-079 36.570 MHz				133-014-9-003
	MISCELLANEOUS				
CF-101	Ceramic Filter	FL-048			140-020-9-001
CF-102	Ceramic Filter	FL-049, 455 kHz (1F-CB)			140-018-9-002
CF-3	Ceramic Filter	FL-033			140-020-9-002
CF-1,2	Ceramic Filter	FL-056			140-020-9-003
S2A-E	Switch, Pushbutton SW-108 FM/AM/CB/DIM/ANL/ Moni/DX				088-037-9-001
S-4	Switch, Rotary SR-182 Channel				083-228-9-001
MT-1	Meter MT-087				320-092-9-001
	Microphone, Dynamic MK-064				562-020-9-001
PL-1	Lamp with Leads, PL-005				400-049-9-001
TP-1,2,3,4,5,6,7,8	Test Point Terminal TP-020				757-028-9-001
	Pushbutton Tuner Ass'y, FM Front End YY-063				523-204-9-001
CN-5	Connector Wafer Ass'y	12P, PG-038			523-204-9-002
	Noise Suppression Capacitor,	0.47μF	CZ-031		033-032-9-003
CN-1	CB Antenna Cord Ass'y.	WZ-024			426-023-9-001
CN-2	Radio Antenna Cord Ass'y	W-070176			426-026-9-001
CN-4	Microphone Cord Ass'y	WZ-041			426-026-9-002
	Speaker & Power Cord Ass'y	WZ-042			426-026-9-003
CN-3	Speaker & Power Cord Ass'y	W-070171			426-026-9-004
	Wire Nut YY-008				763-092-9-001
	"A" Lead Adaptor With Spade Terminal				426-026-9-005
	Ground Wire	W-070153			426-026-9-006
S-10	Noise Suppression Resistor, 10K ohm RZ-004				013-026-9-002
2A	Spare Fuse	FS-001, 2AMP			191-251-9-002
	Main Chassis				257-096-9-001
	Front Chassis				258-024-9-001
	Meter Bracket				251-320-9-001
	Rear Chassis				258-025-9-001
	Heat Sink for AF AMP.				747-055-9-001
	Heat Sink for RF AMP.				747-055-9-002
	Heat Sink for Modulator				747-055-9-003
	IC Mounting Bracket				251-321-9-001
	IC Mounting Spacer				759-078-9-001
	Noise Filter Shield Box				256-073-9-001

CIRCUIT SYMBOL	DESCRIPTION				DYNASCAN PART NO.
	MISCELLANEOUS (Continued)				
	Tuner Shaft Ass'y				523-204-9-008
	Pinion Shaft Ass'y				523-204-9-009
	Slotted Flat Screw				634-090-9-001
	Shaft Spacer "A" (3/6" Long)				759-078-9-002
	Shaft Spacer "B" (1/4" Long)				759-078-9-003
	Shaft Spacer "C" (5/16" Long)				759-078-9-004
	Hez Nut, 3/8" - 32 NEF				653-042-9-001
	Radio PCB MTG STUD				653-042-9-002
	Knob Function Label (Right)				483-316-9-001
	Knob Function Label (Left)				483-316-9-002
	Production Number Label				483-316-9-003
	Coil Spring				767-052-9-001
	Tortion Spring				767-052-9-002
	Foamy Cushion for Meter				502-102-9-001
	Insulator Sheet for Cover				502-102-9-002
	Insulator Sheet for Radio				502-102-9-003
	Dial String				763-093-9-009
	Blind Sheet				763-093-9-010
	Quickie Bolt				763-093-9-011
	Screw, Pan Head 2.6DIA x 4, Metric				634-087-9-002
	Screw, Plastic Pan Head 3DIA x 5, Metric				634-069-9-001
	Screw, Plastic Pan Head 3DIA x 6, Metric				634-051-9-001
	Screw, Binding Head 2DIA x 4, Metric				634-069-9-002
	Screw, Binding Head 2.6DIA x 3, Metric				634-090-9-002
	Screw, Binding Head 2.6DIA x 5, Metric				634-067-9-003
	Screw Binding Head 2.6DIA x 10				634-090-9-003
	Screw, Binding Head 3DIA x 4				634-090-9-004
	Screw Hex Slotted 3DIA x 4, Metric				634-090-9-005
	Hex Nut 2.6 I.D., Metric				653-042-9-003
	Spring Washer 2.6 I.D.				731-049-9-002
	E-Ring 2DIA				741-099-9-003
	E-Ring 4DIA				741-099-9-004
	Screw, Binding Head 5DIA x 20, Metric				634-090-9-006
	Hez Nut 5I.D. Metric				653-042-9-004
	Plain Washer 5 I.D.				731-051-9-001
	Spring Washer 5 I.D.				731-051-9-002
	Hez Head Bolt 6DIA x 15, Metric				634-090-9-007
	Lock Washer 6 I.D.				731-051-9-003
	Tapping Screw, Round Head 5DIA x 10				710-039-9-001
	Tapping Screw, Round Head 3.5DIA x 8				710-039-9-002
	Tapping Screw, Round Head 4DIA x 10				710-039-9-003
	Lock Washer 3.5 I.D.				731-051-9-004
	Lock Washer 4 I.D.				731-051-9-005
	Screw, Binding Head 3DIA x 5, Metric				634-067-9-002
	Knob Spring for Squelch Knob				763-084-9-003
	Knob Spring for Dynamike Knob				763-085-9-005
	Knob Spring Channel Knob				763-084-9-004
	Rivet, 3.2DIA x 3.2LG				733-022-9-001
	Eyelet 2DIA x 2				735-008-9-001
	Display Box				500-336-9-001
	Styrofoam Pad				503-139-9-001
	Styrofoam Box				503-140-9-001
	Master Carton				500-337-9-001
	Instruction Manual				480-207-9-001
	Schematic Diagram/Parts List				499-115-9-001

26,31,38,41					
R-62,212,54,61	Resistor, Carbon Film	1/4W	1.5K ohm	5%	002-104-5-152
R-1,34	Resistor, Carbon Film	1/4W	1.8K ohm	5%	002-104-5-182
R-216,218,302,5,23,7	Resistor, Carbon Film	1/4W	2.2K ohm	5%	002-104-5-222
R-308	Resistor, Carbon Film	1/4W	2.7K ohm	5%	002-104-5-272

CIRCUIT SYMBOL	DESCRIPTION				DYNASCAN PART NO.
	CAPACITORS (Continued)				
C-12,17	Capacitor, Aluminum Solid	16V	0.22μF	20%	022-158-9-001
C-16,416	Capacitor, Aluminum Solid	16V	0.47μF	20%	022-161-9-002
C-503,504	Capacitor, Tantalum	6.3V	0.47μF	20%	027-027-9-001
C-10,38	Capacitor, Tantalum	16V	1μF	20%	027-027-9-002
C-403,404	Capacitor, Tantalum	25V	2.2μF	20%	027-021-9-001
C-431	Capacitor, Tantalum	16V	4.7μF	20%	027-026-9-004
C-36	Capacitor, Polystyrene Film	50V	180pF	10%	030-041-9-001
C-15	Capacitor, Polystyrene Film	50V	470pF	10%	030-041-9-002
C-24,34	Capacitor, Polystyrene Film	50V	0.0022μF	10%	030-041-9-003
C-433,226,31,23,434	Capacitor, Polyester Film	50V	0.0047μF	10%	025-126-9-001
C-35	Capacitor, Polyester Film	50V	0.0068μF	10%	025-122-9-003
C-222,32	Capacitor, Polyester Film	50V	0.01μF	10%	025-121-9-002
C-439,216,225,414,420, 424	Capacitor, Polyester Film	50V	0.022μF	10%	025-121-9-003
C-18,19	Capacitor, Polyester Film	50V	0.033μF	10%	025-121-9-004
C-44	Capacitor, Polyester Film	50V	0.039μF	10%	025-121-9-005
C-14	Capacitor, Polyester Film	50V	0.047μF	10%	025-121-9-006
C-219,428	Capacitor, Polyester Film	50V	0.068μF	10%	025-125-9-001
C-501,502	Capacitor, Polyester Film	50V	0.1μF	10%	025-121-9-001
C-204	Capacitor, Ceramic Disk	50V	1pF	±0.25pF	SL 020-180-9-001
C-215,303	Capacitor, Ceramic Disk	50V	2pF	±0.25pF	SL 020-187-9-001
C-402,411	Capacitor, Ceramic Disk	50V	5pF	±0.5pF	SL 020-187-9-002
C-415	Capacitor, Ceramic Disk	50V	7pF	±1pF	SL 020-187-9-003
C-321,401	Capacitor, Ceramic Disk	50V	10pF	±1pF	SL 020-187-9-004
C-409,410	Capacitor, Ceramic Disk	50V	47pF	5%	SL 020-181-9-010
C-201	Capacitor, Ceramic Disk	50V	27pF	5%	SL 020-187-9-005
C-307	Capacitor, Ceramic Disk	50V	33pF	5%	SL 020-187-9-006
C-310,427,429,339	Capacitor, Ceramic Disk	50V	68pF	5%	SL 020-178-9-009
C-301	Capacitor, Ceramic Disk	50V	180pF	10%	SL 020-148-9-002
C-41	Capacitor, Ceramic Disk	50V	150pF	10%	SL 020-181-9-012
C-311,11	Capacitor, Ceramic Disk	50V	220pF	10%	SL 020-125-9-005
C-312,413	Capacitor, Ceramic Disk	50V	250pF	10%	SL 020-181-9-007
C-316	Capacitor, Ceramic Disk	50V	330pF	10%	SL 020-181-9-008
C-13	Capacitor, Ceramic Disk	50V	680pF	10%	SL 020-187-9-007
C-302,304	Capacitor, Ceramic Disk	50V	300pF	10%	SL 020-187-9-008
C-30	Capacitor, Ceramic Disk	50V	47pF	5%	SL 020-187-9-009
C-5	Capacitor, Ceramic Disk	50V	10pF	±1pF	CH 020-187-9-010
C-322,28	Capacitor, Ceramic Disk	50V	100pF	10%	CH 020-187-9-011
C-320	Capacitor, Ceramic Disk	50V	330pF	10%	RH 020-181-9-015
C-323	Capacitor, Ceramic Disk	25V	0.001μF	10%	YB 020-181-9-022
C-454,459	Capacitor, Ceramic Disk	12V	0.2μF	+80% -20%	BC 020-187-9-012
C-408,319	Capacitor, Ceramic Disk	25V	0.001μF	+80% -20%	YG 020-180-9-020
C-206	Capacitor, Ceramic Disk	25V	0.0022μF	+80% -20%	YG 020-178-9-019
C-461,221,223,210,460	Capacitor, Ceramic Disk	25V	0.0047μF	+80% -20%	YG 020-187-9-013
C-202,203,205,209,211, 309,313,317,318,326, 332,405,406,412,417, 419,436,437,440,51, 523, 231	Capacitor, Ceramic Disk	25V	0.01μF	+80% -20%	YG 020-180-9-023

CIRCUIT SYMBOL	DESCRIPTION	DYNASCAN PART NO.
	MISCELLANEOUS (Continued)	
	Cord Clamp (A)	741-099-9-001
	Cord Clamp (B)	741-099-9-002
	Cover	253-061-9-001
	Channel Display Mounting Bracket	251-322-9-001
	Pointer Guide Ass'y	523-204-9-003
	Radio Chassis Ass'y	523-204-9-004
	String Tension Lever Ass'y	523-204-9-005
	Bearing Bracket Ass'y	523-204-9-006
	Attenna Trimmer Bracket Ass'y	523-204-9-007
	L Shaped Back-up Plate	260-130-9-001
	Spade Terminal	765-012-9-001
	Microphone Connector Bracket	251-323-9-001
	Knob Spring for Ford Front Knob	767-051-9-001
	VR Mounting Bracket	261-073-9-001
	Perforated Mounting Strap	251-218-9-001
	Back Plate	260-131-9-001
	Lamp Holder	763-093-9-001
	Dial Pointer	763-093-9-002
	Microphone Hanger	741-074-9-001
	FCC Identification Plate	600-040-9-001
	Knob Inlay (Squelch)	260-132-9-001
	Decoration Panel (Dull Black)	260-133-9-001
	Decoration Panel (Wood Grain)	260-134-9-001
	Knob Inlay for Ford Front Knob (SPIN)	260-135-9-001
	Knob Inlay for STD Front Knob	600-034-9-002
	Knob Inlay for Ford Front Knob	260-136-9-001
	Insulator Sheet for Radio PCB	763-093-9-003
	Blind Seal	763-093-9-004
	Nose Piece	763-093-9-005
	Channel Selector Knob	751-154-9-001
	Squelch Knob	751-154-9-002
	Dynamike Knob	751-154-9-003
	CH. Display Holder	763-093-9-006
	Push Button "DIM"	384-022-9-001
	Push Button "ANL"	384-022-9-002
	Push Button "MON"	384-022-9-003
	Push Button "DX"	384-022-9-004
	Push Button "FM"	384-022-9-005
	Push Button "AM"	384-022-9-006
	Push Button "CB"	384-022-9-007
	Pinion	763-093-9-007
	Optical Filter Piece (Purple)	763-093-9-008
	Dial Scale Plate	260-137-9-001
	Foreign Car Trimplate	260-138-9-001
	Universal Trimplate	260-121-9-001
	Rubber Gasket	383-016-9-001
	Standard Front Knob	751-150-9-002
	Standard Rear Knob	751-150-9-001
	Ford Type Shallow Rear Knob	751-154-9-004
	Ford Type Shallow Front Knob	751-154-9-005
	Ford Type Deep Rear Knob	751-154-9-006
	LED Mounting Bush	380-291-9-001
	Pulley	743-005-9-001
	Gear	743-005-9-002
	Cord Bushing	380-291-9-002

CIRCUIT SYMBOL	DESCRIPTION	DYNASCAN PART NO.
	MISCELLANEOUS (Continued)	
	FCC Form 505	492-041-9-001
	FCC Form 555-B	492-046-9-001
	FCC Rules Part 95	492-047-9-001
	Warranty Card	491-139-9-001
	Service Station Card	492-042-0-000
	Printed Circuit Board PC-278 CB Main	302-261-9-001
	Printed Circuit Board PC-283 Radio Main	302-262-9-001
	Printed Circuit Board PC-281 Variable Resistor	302-263-9-001
	Printed Circuit Board PC-289 Noise Filter	302-264-9-001
	Printed Circuit Board PC-286 Channel Display	302-265-9-001
	Printed Circuit Board PC-280 Channel Selector	302-266-9-001