HL-1Kfx PA UNIT
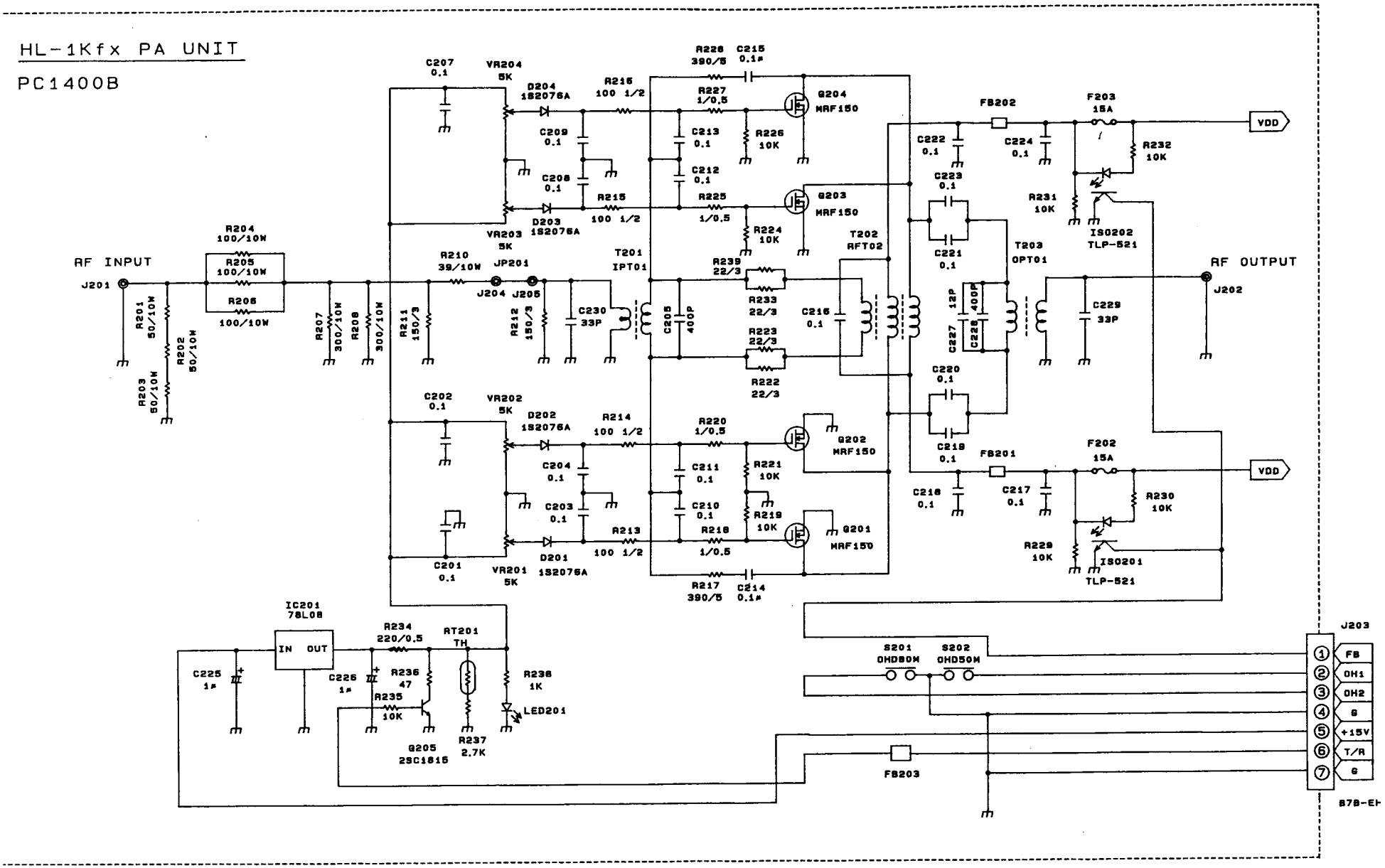
PC1400B