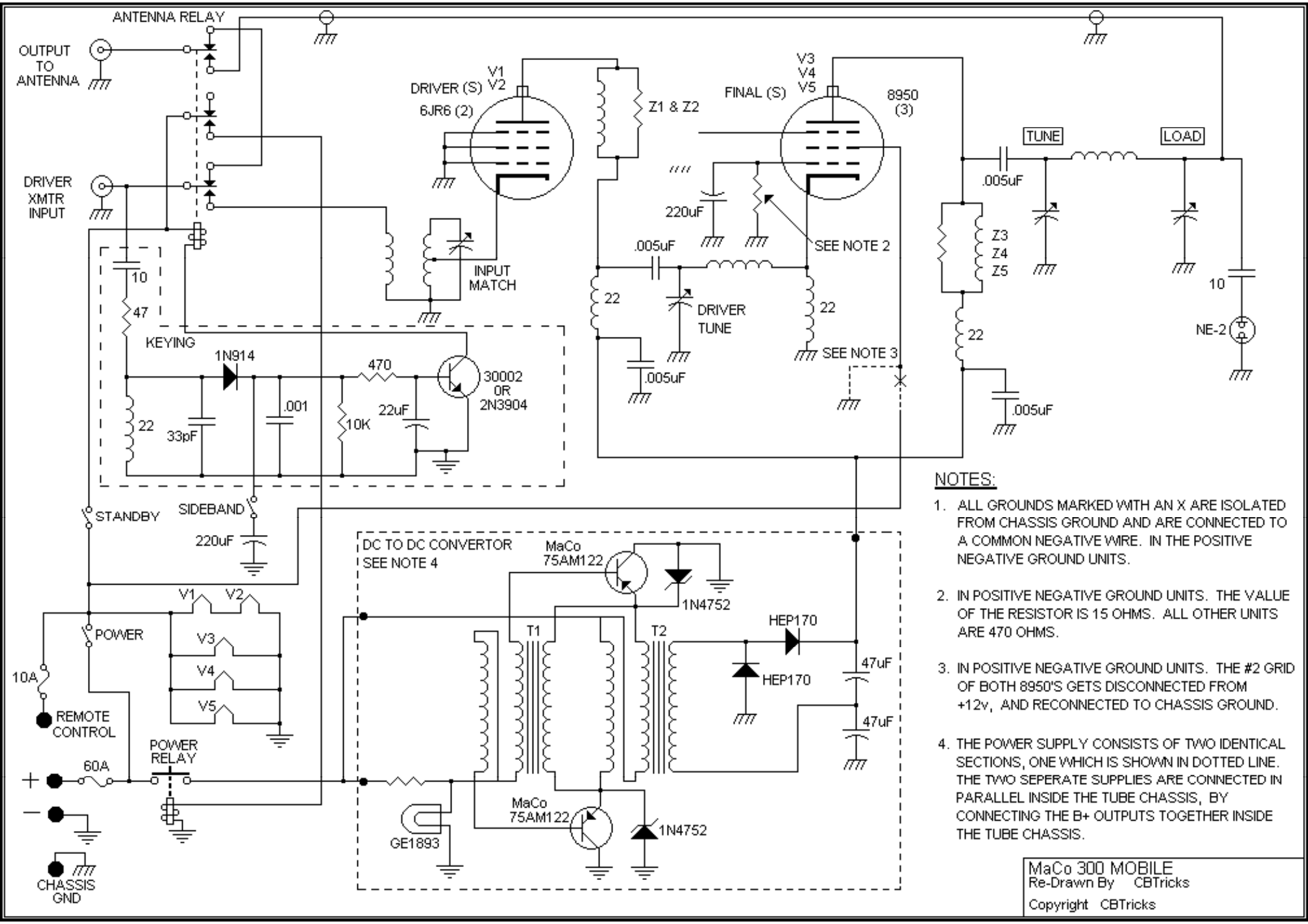

NOTES:

1. ALL GROUNDS MARKED WITH AN X ARE ISOLATED FROM CHASSIS GROUND AND ARE CONNECTED TO A COMMON NEGATIVE WIRE. IN THE POSITIVE NEGATIVE GROUND UNITS.
2. IN POSITIVE NEGATIVE GROUND UNITS. THE VALUE OF THE RESISTOR IS 15 OHMS. ALL OTHER UNITS ARE 470 OHMS.
3. IN POSITIVE NEGATIVE GROUND UNITS. THE #2 GRID OF BOTH 8950'S GETS DISCONNECTED FROM +12v, AND RECONNECTED TO CHASSIS GROUND.
4. THE POWER SUPPLY CONSISTS OF TWO IDENTICAL SECTIONS, ONE WHICH IS SHOWN IN DOTTED LINE. THE TWO SEPERATE SUPPLIES ARE CONNECTED IN PARALLEL INSIDE THE TUBE CHASSIS, BY CONNECTING THE B+ OUTPUTS TOGETHER INSIDE THE TUBE CHASSIS.

MaCo 300 MOBILE
Re-Drawn By CBTricks

Copyright CBTricks