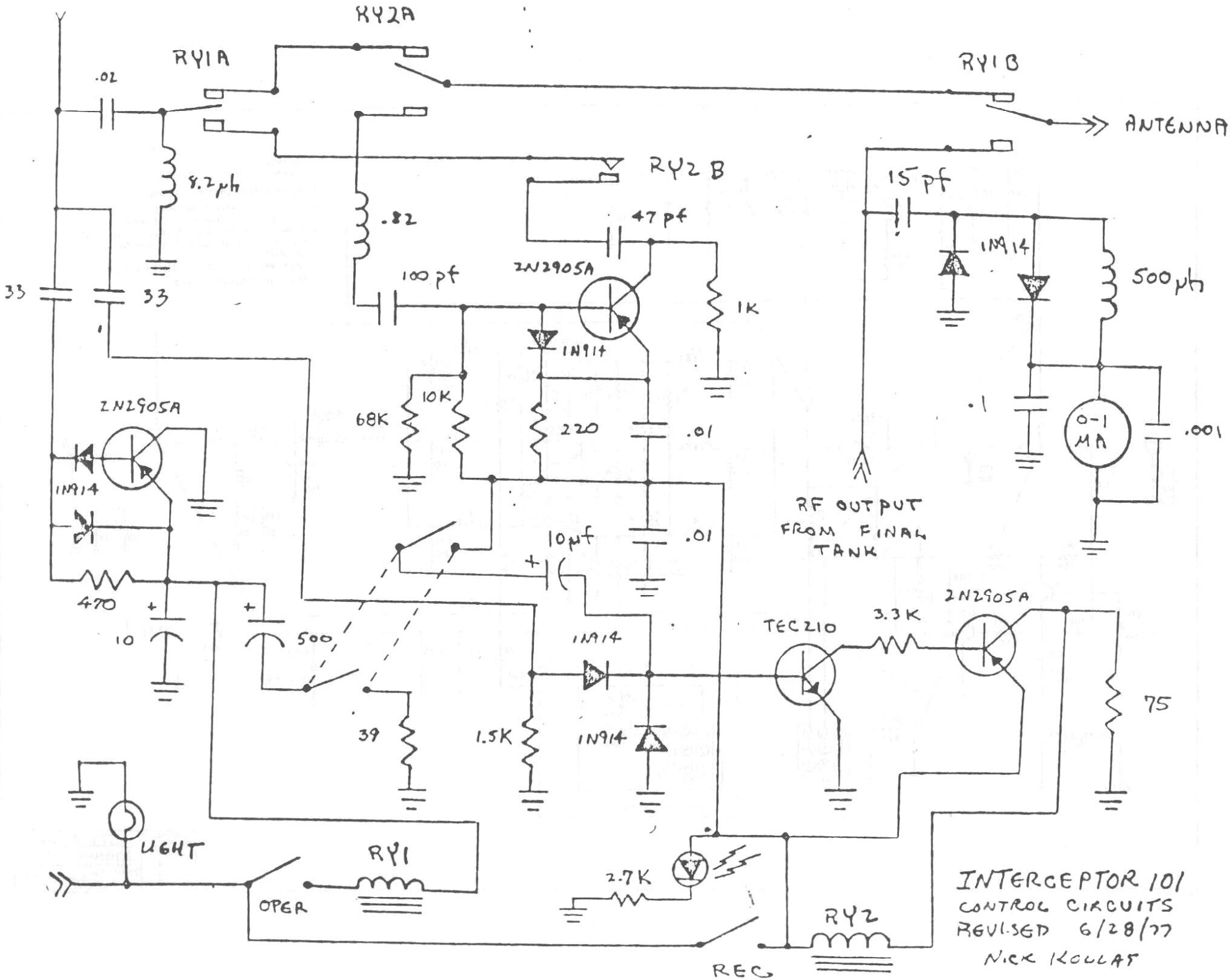

INTERCEPTOR 101
CONTROL CIRCUITS
REVISED 6/28/77
NICK KOLLAS