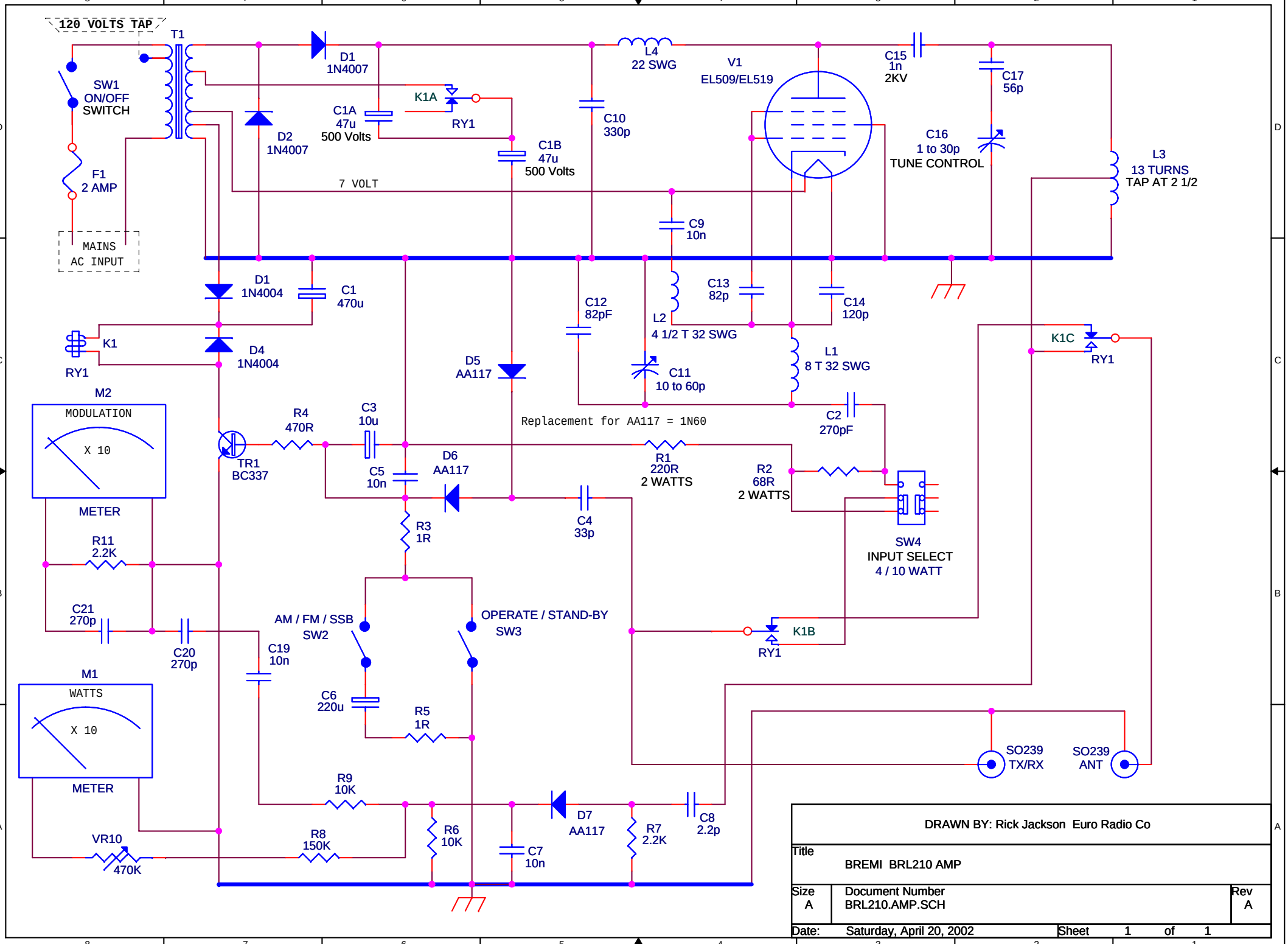
120 VOLTS TAP
T1
SW1
ON/OFF
SWITCH
F1
2 AMP
MAINS
AC INPUT
D1
1N4007
D2
1N4007
C1A
47u
500 Volts
K1A
RY1
C1B
47u
500 Volts
7 VOLT
L4
22 SWG
C10
330p
V1
EL509/EL519
C15
1n
2KV
C17
56p
C16
1 to 30p
TUNE CONTROL
L3
13 TURNS
TAP AT 2 1/2
C9
10n
D1
1N4004
C1
470u
K1
RY1
D4
1N4004
C12
82pF
L2
4 1/2 T 32 SWG
C13
82p
C14
120p
L1
8 T 32 SWG
C11
10 to 60p
D5
AA117
K1C
RY1
M2
MODULATION
X 10
METER
R4
470R
TR1
BC337
C3
10u
C5
10n
D6
AA117
Replacement for AA117 = 1N60
R1
220R
2 WATTS
C2
270pF
R2
68R
2 WATTS
SW4
INPUT SELECT
4 / 10 WATT
R3
1R
C4
33p
R11
2.2K
C21
270p
C20
270p
AM / FM / SSB
SW2
OPERATE / STAND-BY
SW3
K1B
RY1
C19
10n
C6
220u
R5
1R
M1
WATTS
X 10
METER
SO239
TX/RX
SO239
ANT
R9
10K
D7
AA117
C8
2.2p
R7
2.2K
R6
10K
C7
10n
R8
150K
VR10
470K
DRAWN BY: Rick Jackson Euro Radio Co
Title
BREMI BRL210 AMP
Size
A
Document Number
BRL210.AMP.SCH
Rev
A
Date: Saturday, April 20, 2002
Sheet 1 of 1